SIEMENS

Components for System Integration

Process Automation

Catalog PA 11

Edition 2013

Answers for industry.

Related catalogs

Process Automation FI 01
Field Instruments for
Process Automation

E86060-K6201-A101-B4-7600

Process Automation PA 01
Process Analytical Instruments

(PDF only: E86060-K3501-A101-A7-7600)

Industrial Communication IK PI
SIMATIC NET

E86060-K6710-A101-B7-7600

SITRAIN ITC
Training for Automation and
Industrial Solutions

Only available in German
E86060-K6850-A101-C3

Products for Automation and Drives CA 01
Interactive Catalog

DVD: E86060-D4001-A510-D3-7600

Industry Mall
Information and Ordering Platform
in the Internet:

www.siemens.com/industrymall

Process Automation
Components for System Integration

Catalog PA 11 · 2013

The products and systems described in this catalog are manufactured/distributed under application of a certified quality management system in accordance with DIN EN ISO 9001 (Certified Registration No. 000656 QM08). The certificate is recognized by all IQNet countries.

Supersedes:
Catalog PA 11 · 2012

Please contact your local Siemens branch

Gas sampling probes 1

Sample gas pumps 2

Heated sample gas lines 3

Components for sample preparation 4

Measuring equipment 5

Appendix 6

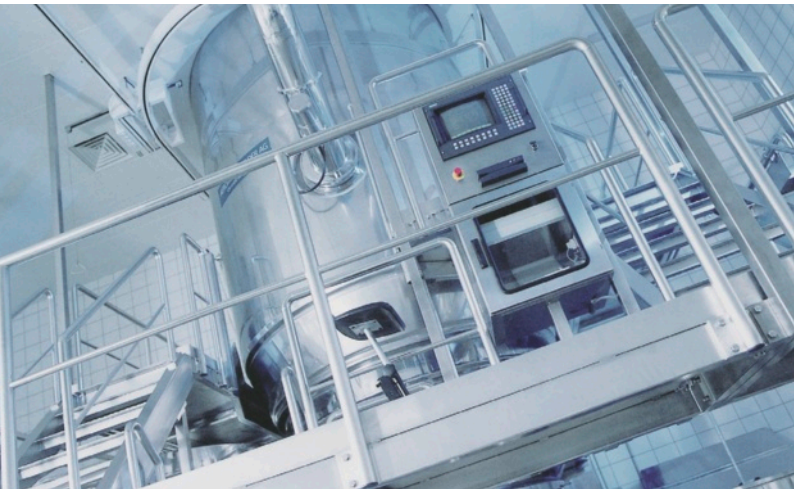

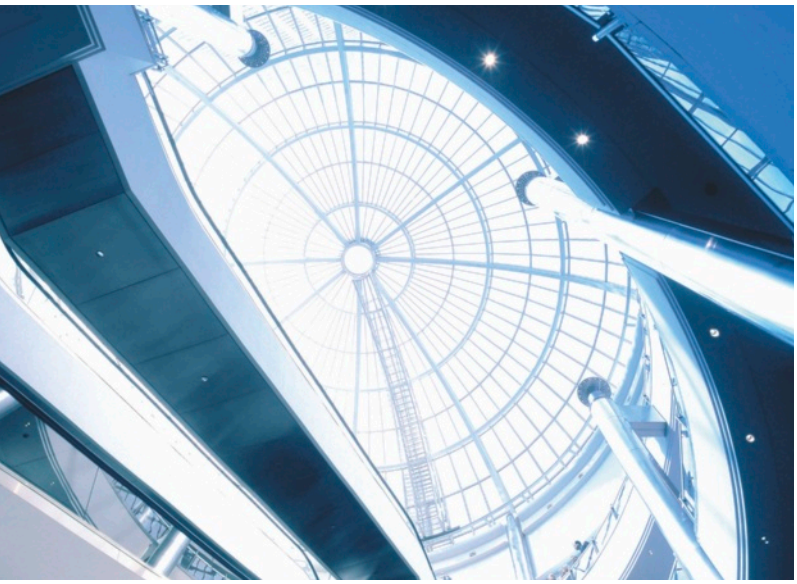

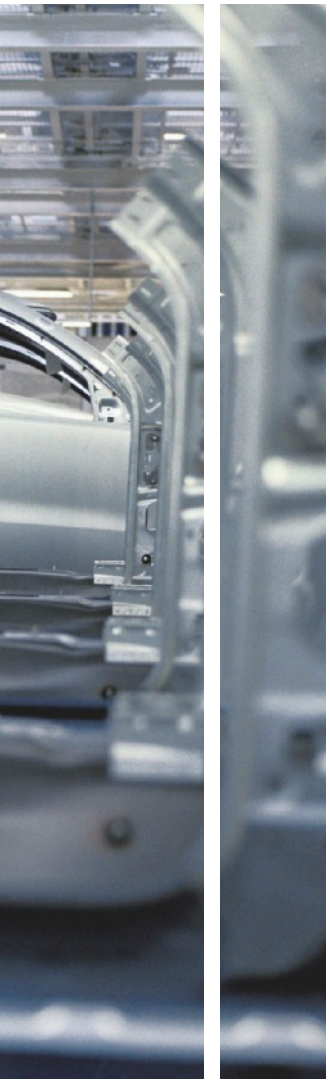

Answers for industry.

Siemens Industry answers the challenges in the manufacturing and the process industry as well as in the building automation business. Our drive and automation solutions based on Totally Integrated Automation (TIA) and Totally Integrated Power (TIP) are employed in all kinds of industry. In the manufacturing and the process industry. In industrial as well as in functional buildings.

Siemens offers automation, drive, and low-voltage switching technology as well as industrial software from standard products up to entire industry solutions. The industry software enables our industry customers to optimize the entire value chain – from product design and development through manufacture and sales up to after-sales service. Our electrical and mechanical components offer integrated technologies for the entire drive train – from couplings to gear units, from motors to control and drive solutions for all engineering industries. Our technology platform TIP offers robust solutions for power distribution.

The high quality of our products sets industry-wide benchmarks. High environmental aims are part of our eco-management, and we implement these aims consistently. Right from product design, possible effects on the environment are examined. Hence many of our products and systems are RoHS compliant (Restriction of Hazardous Substances). As a matter of course, our production sites are certified according to DIN EN ISO 14001, but to us, environmental protection also means most efficient utilization of valuable resources. The best example are our energy-efficient drives with energy savings up to 60 %.

Check out the opportunities our automation and drive solutions provide. And discover how you can sustainably enhance your competitive edge with us.

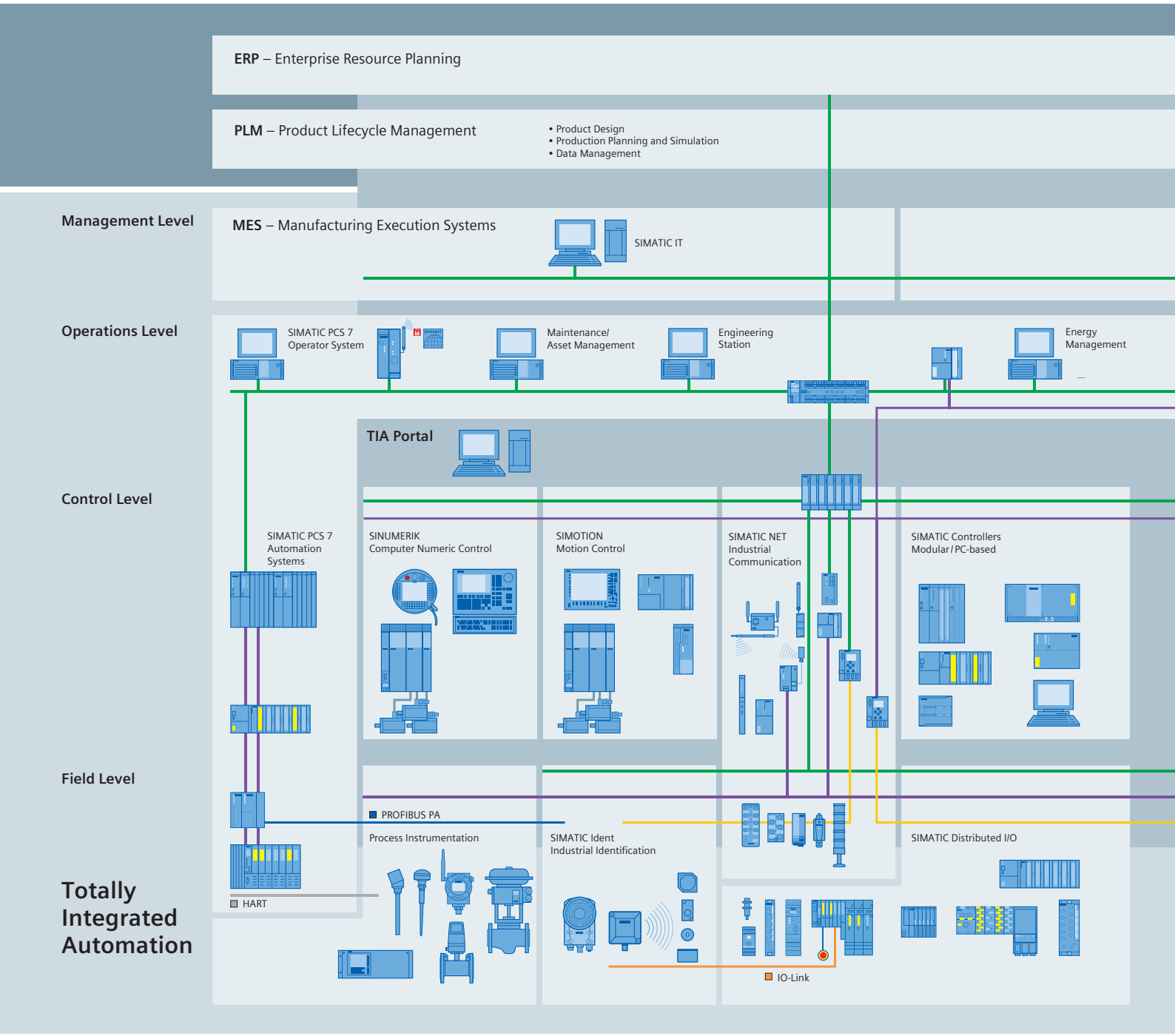

Setting standards in productivity and competitiveness.

Totally Integrated Automation.

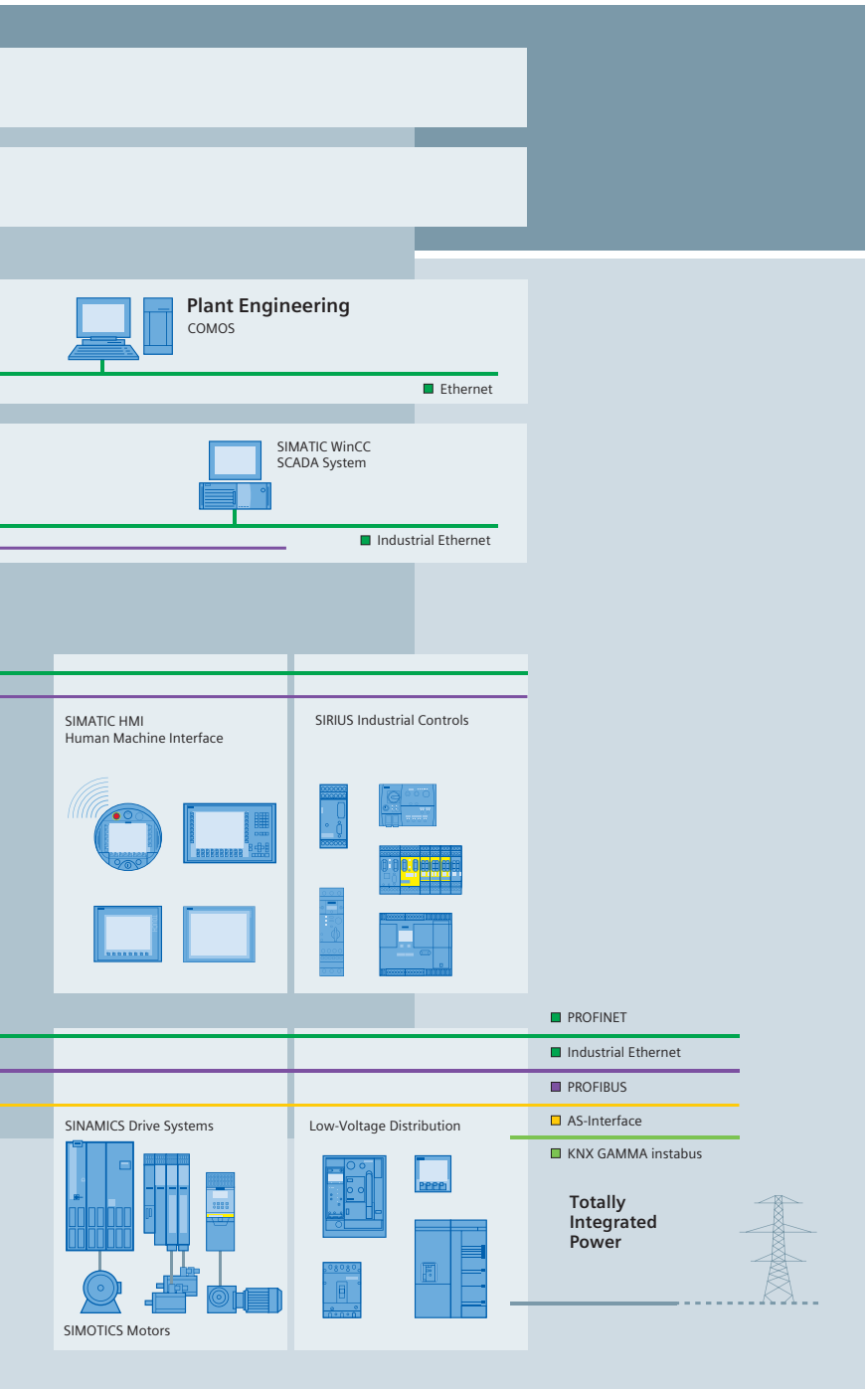

TIA is characterized by its unique continuity.

It provides maximum transparency at all levels with reduced interfacing requirements – covering the field level, production control level, up to the corporate management level. With TIA you also profit throughout the complete life cycle of your plant – starting with the initial planning steps through operation up to modernization, where we offer a high measure of investment security resulting from continuity in the further development of our products and from reducing the number of interfaces to a minimum.

The unique continuity is already a defined characteristic at the development stage of our products and systems.

The result: maximum interoperability – covering the controller, HMI, drives, up to the process control system. This reduces the complexity of the automation solution in your plant. You will experience this, for example, in the engineering phase of the automation solution in the form of reduced time requirements and cost, or during operation using the continuous diagnostics facilities of Totally Integrated Automation for increasing the availability of your plant.

Thanks to Totally Integrated Automation, Siemens provides an integrated basis for the implementation of customized automation solutions – in all industries from inbound to outbound.

Integrated power distribution from one source.

Totally Integrated Power.

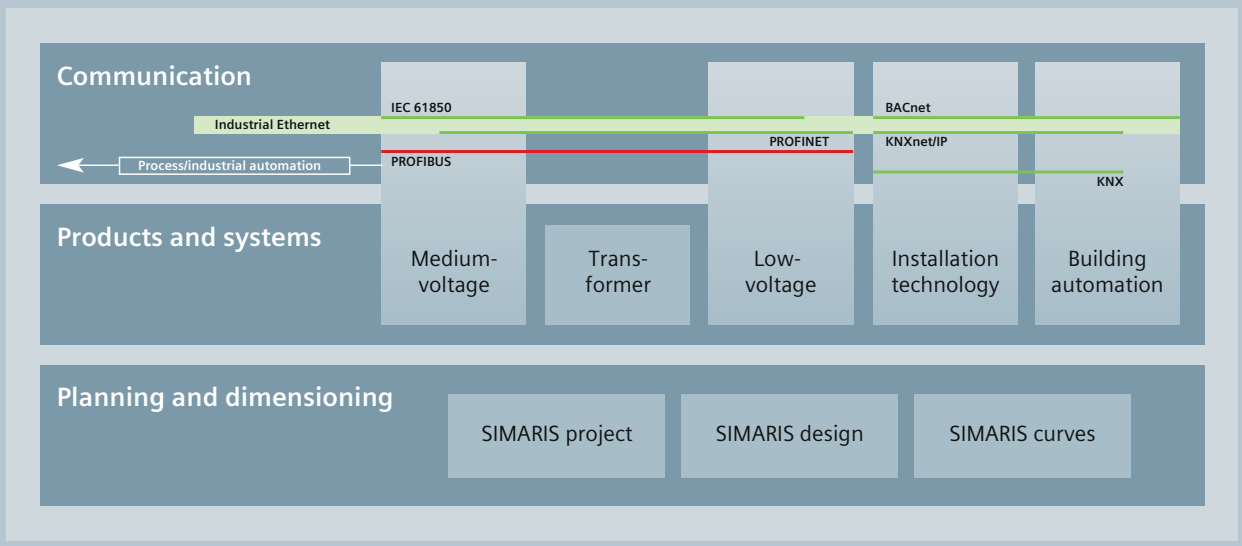

Electrical power distribution requires integrated solutions. Our answer: Totally Integrated Power (TIP). This includes tools and support for planning and configuration and a complete, optimally harmonized product and system portfolio for integrated power distribution from medium-voltage switchgear right to socket outlets.

The power distribution products and systems can be interfaced to building or industrial automation systems (as part of Total Building Solutions or Totally Integrated Automation) via communication capable circuit breakers and modules, allowing the full potential for optimization that an integrated solution offers to be exploited throughout the product cycle – from planning right through to installation and operation.

Thanks to a comprehensive energy management system, power flows can be made transparent and the energy consumption of individual loads can be calculated and allocated. Building operators can thus identify power-intensive loads and implement effective optimization measures. With its products and systems, Totally Integrated Power forms the basis for this functionality and guarantees greater cost-efficiency in industrial applications, infrastructure and buildings.

Industries

In the field of process instrumentation, process analytics and weighing technology, Siemens focuses on a number of key industries such as:

- Chemical
- Pharmaceutical
- Water/wastewater
- Mining, aggregates, cement
- Oil and gas/hydrocarbon processing
- Pulp and paper
- Food and beverage
- Marine


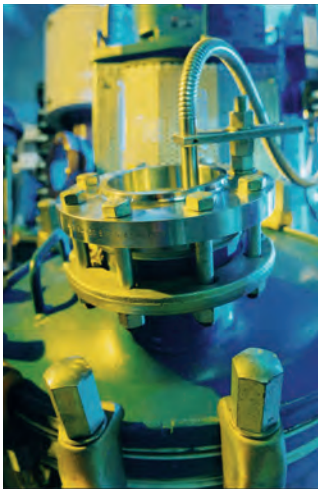





Process Analytics

Siemens is a leading provider of process analyzers and process analysis systems. We offer our global customers the best solutions for their applications based on innovative analysis technologies, customized system engineering, sound knowledge of customer applications and professional support. And with Totally Integrated Automation, Siemens Process Analytics is your qualified partner for efficient solutions that integrate process analyzers into automation systems in the process industry.

Continuous Gas Analytics

From emission monitoring in waste incinerators and power plants to gas analysis in the chemical industry to rotary kiln monitoring in cement plants, the highly accurate and reliable Siemens analyzers will always do the job.

SITRANS SL
Continuous gas analyzer with benchmarksetting in-situ technology for process control even under extreme measuring conditions.

[1]

[2]

[3]

The technology used in state-of-the-art process analyzers is determined by the needs of the specific application. Devices must be cost-effective, functional, space and energy-saving, and must provide just the right amount of power to meet all needs.

Siemens Process Analytics offers a wide and innovative portfolio designed to meet all user requirements for comprehensive products and solutions.

We combine outstanding expertise in developing high-performance analytical devices with in-depth application knowledge from many process industry applications.

The analyzers operate using a menu structure and are in accordance with NAMUR recommendations. The analyzers are easily integrated into the SIMATIC automation concept Totally Integrated Automation (TIA) and are programmed using SIMATIC PDM software and PROFIBUS DP / PA interfaces.

PROCESS GAS ANALYSIS – EXTRACTIVE

■ ULTRAMAT 23 [1]

The ULTRAMAT 23 is a cost-effective multicomponent analyzer for the measurement of up to 3 infrared sensitive gases using the NDIR principle plus O_2 using an electrochemical or paramagnetic Oxygen measuring cell.

The ULTRAMAT 23 is suitable for a wide range of standard applications, such as emission monitoring, furnace optimization, room air monitoring and other applications. Calibration using ambient air eliminates the need to use calibration gases.

The ULTRAMAT 23 is also available with build-in H_2S-sensor for Biogas applications.

SERIES 6

The Series 6 gas analyzers are comprehensive analyzers that meet the full range of requirements:

■ CALOMAT 6 [2] [3]

The CALOMAT 6 19" rack mount or as a field device uses the thermal conductivity method to accurately measure the composition and concentration of process gases. It is primarily designed for the measurement of hydrogen concentrations in inert gas such as blast furnace gas and carbon dioxide mixtures.

■ CALOMAT 62 [2] [3]

The CALOMAT 62 applies thermal conductivity detection (TCD) principles and is specially designed for use in applications with corrosive gases such as chlorine. The CALOMAT 62 measures the concentration of gas components such as H_2, Cl_2, HCl or NH_3 in binary or quasi-binary gas blends.

■ FIDAMAT 6 [1]

The FIDAMAT 6 measures the total hydrocarbon content in air or even in highboiling gas mixtures. It covers nearly all requirements, from the detection of trace hydrocarbon in pure gas analyses to total measurement of high hydrocarbon concentrations, even in the presence of corrosive gases.

Continuous Gas Analytics

[1]

[2]

[3]

OXYMAT 6 [1] [2]

The OXYMAT 6 is an oxygen analyzer, optionally in 19" rack mount or in a robust field housing for installation in harsh environments. The OXYMAT 6 can be used in applications including emission measurements for use in production process control and quality assurance. Due to its ultrafast response, the OXYMAT 6 is perfect for monitoring safety-relevant plants. Its corrosion proof design also makes the OXYMAT 6 the analyzer of choice for analysis in the presence of highly corrosive gases.

OXYMAT 61 [1]

The OXYMAT 61 is a low-cost oxygen analyzer for standard applications. It can use ambient air as a reference gas that is supplied to the analyzer section by the internal pump.

OXYMAT 64 [1]

The OXYMAT 64 is a gas analyzer for the measurement of smallest oxygen concentrations in pure gas applications. Air separation plants, production of technical gases, welding in a protective atmosphere – these are just a few examples where the OXYMAT 64, a completion of the well-proven Siemens Series 6 of continuous gas analyzers, reliably detects small traces of oxygen.

ULTRAMAT 6 [1] [2]

The ULTRAMAT 6 is an analyzer in 19" rack mount or field housing. Measurement of up to four infrared active components in a single unit is possible. It can be used in all applications from emission measurement to process control, even in the presence of highly corrosive gases.

ULTRAMAT/OXYMAT 6 [1]

The Series 6 units can be combined in a 19" rack to form multi-component devices with ULTRAMAT 6 and OXYMAT 6 benches. This provides, with the smallest possible footprint, an infrared channel for the measurement of up to two IR components and a channel for oxygen measurement.

Ex-proof designs [2]

An additional purge monitoring unit makes the CALOMAT 6, OXYMAT 6 and ULTRAMAT 6 gas analyzers in field housing suitable for installation in hazardous areas. Measurements can include both non-flammable and flammable gases.

SIPROCESS UV600 [3]

SIPROCESS UV600 is an extractive UV gas analyzer for simultaneous measurement of up to 3 components. The SIPROCESS UV600 is especially suitable to measure very low concentrations of NO, NO2, SO2 or H2S. Simultaneous measurement of NO and NO2 offers totalized NOx determination without additional devices like NO2 converters or CLD analyzers.

[4]

[5]

PROCESS GAS ANALYSIS – IN-SITU

LDS 6 [4]

The robust and reliable LDS 6 in-situ gas analyzer can measure gases even under extreme conditions. Precise and reliable results are obtained even at 1,200 °C (2,192 °F) or where the dust concentration is very high. The LDS 6, for example, measures in-situ concentrations of O_2 (Temp.), NH_3, HCl, HF H_2O, CO or CO_2 in flue gas before and after gas cleaning. Applications in the chemical and petrochemical industries, for steel and metal production, as well as in cement or paper plants are a match for the LDS 6.

SITRANS SL [5]

SITRANS SL sets a new benchmark with insitu technology for process control – even under extreme measuring conditions. It offers proven technology integrated into a more compact in-situ gas analyzer design.

SITRANS SL combines the benefits of the proven referencing technology – with a direct operating mode as close as possible to the process. An integrated reference cell, filled with a non-interfering gas, which allows laser locking completely independent of process gas concentrations leads to utmost stable operation, negligible drift values and extended maintenance intervals. SITRANS SL designed in a unique and compact design, including a local user interface (LUI) is the perfect solution for single point measurement applications in rough environments.

SITRANS SL is used for process control in the chemical industry, even in hazardous areas due to its EEx d design. Other applications are e. g. process optimization in the steel industry or combustion control in boilers or waste incinerators.

SERVICE AND MAINTENANCE

SIPROM GA

The SIPROM GA software tool is designed for service and maintenance applications with our process gas analyzers. SIPROM GA can control and monitor all functions of the analyzers as independent or networked units. Integration into the Ethernet permits remote servicing and diagnostics over long distances.

SIMATIC PDM

SIMATIC PDM (Process Device Manager) is a universal, non-proprietary tool for commissioning, diagnostics and maintenance of gas analyzers and many field devices. The Software can be operated on any computer. It is also available as integrated version of SIMATIC PCS 7 and S7 controllers.
More information is available in section communication and software.

Chromatography

Siemens application experience and innovative technology in the field of process gas chromatography helps us provide exceptional customer solutions. With our instruments we solve many different measurement problems in almost any industry – with high performance and in a best economical way.

SITRANS CV
Ultra compact gas chromatograph for reliable, exact and fast analysis of natural gas.

[1]

[2]

MicroSAM [1]

is the smallest explosion-proof in-line process gas chromatograph made by Siemens. State-of-the-art silicon-based micromechanical components allow miniaturization and increased performance at the same time. And MicroSAM is so easy to use and so rugged and small that it can be mounted right at the sampling point. Its performance profile is impressive:

- State-of-the-art technology drastically reduces cycle times, providing better information about the process.
- Valveless live sample injection and column switching.
- Multiple detection for verification of the results.
- Synchronicity: multiple analyzers can be connected in parallel for several sample streams, resulting in more information per time unit, a high degree of reliability should one of the systems fail, and easy implementation of redundant systems.
- Cost-effective and compact, saving installation, maintenance, and service costs.

SITRANS CV [1]

A gas chromatograph for reliable, exact and fast analysis of natural gas. The rugged and compact design makes the SITRANS CV suitable for extreme areas of use, e. g. off-shore exploration or direct mounting on a pipeline. Operation of SITRANS CV using CV Control software is simple, clear and fast. The Software "CV Control" has been specially developed for the requirements of the natural gas market, e. g. custody transfer.

MAXUM edition II [2]

is very well suited to use in rough industrial environments and performs a wide range of duties in the chemical and petrochemical industries and in refineries. A selection of columns and detectors permits highly selective and sensitive analysis of multiple process components.

Benefits of MAXUM edition II:

- Flexible oven concept, temperature-programmable and energy-saving single or dual oven configurations.
- Valveless live sample injection and column switching.
- Parallel chromatography allows division of a single-train chromatograph analysis into multiple single trains.
- Open network with TCP/IP and Ethernet for communication with PCs, other chromatographs or a DCS.

Analytic Solutions

Our customers' requirements drive the solution. We offer you an integrated design covering the sampling point and sample preparation up to complete analyzer cabinets, for portable applications or for installation in a larger analyzer shelter. This includes signal processing and communications to the control room and process control system.

To offer solutions for your application needs, we rely on many years of worldwide experience in process automation and engineering and a collection of specialized knowledge in key industries and industrial sectors.

This ensures you will get Siemens quality from a single source with a function warranty for the entire system. You can rely on this portfolio for:

- Customized services and solutions from front-end engineering and design (FEED) up to fully air-conditioned analyzer shelters.
- Support during the approval phase.
- Preliminary and detailed planning with state-of-the-art tools and excellent documentation.
- System assembly and testing in Siemens facilities in the USA, Germany and Singapore.
- Experience with all relevant national and international standards.
- Commissioning by specialists all over the world.
- Tele-maintenance, on-site servicing, spare parts supplies and customized training.
- **Analytical application sets**
  Analytical application sets are standardized system solutions for a number of specific applications. Siemens offers ready-to-use developed sets for various industries like cement, energy, natural gas, etc.

Our references speak for themselves. We would be pleased to demonstrate our expertise!

Gas sampling probes

1/2 **Gas sampling probe for process gas lines, without filter**

1/3 **Gas sampling probe with external, electrically heated filter**

1/3 Self-regulating

1/4 With temperature controller

1/5 With self-regulating heater, explosion-proof version according to ATEX

1/6 With temperature monitoring and connection for backflushing

1/7 **Accessories and configuration example**

Gas sampling probe for process gas lines, without filter

Application

For process gases with a dust concentration up to approx. 20 mg/m³, operating pressures up to max. 25 bar and temperatures up to 600 °C.

Design

Sampling pipe made of stainless steel (mat. No. 1.4571), length 0.6 m, optional outer diameter of 6 or 12 mm. With shut-off valve. Adjustable depth of penetration into the process gas line.

Flange DN 25, PN 16 DIN 1512 made of stainless steel (mat. No. 1.4571).

Other flanges on request.

Selection and ordering Data

	Order No.
Gas sampling probe for process gas lines, without filter	
with shut-off valve and sampling pipe	
• 6 mm outer diameter	**7MB1 943-1EA01**
• 12 mm outer diameter	**7MB1 943-1EA02**
Gas sampling probes for process gas lines with flange dimensions other than DN 25	**On request**

Dimensional drawings

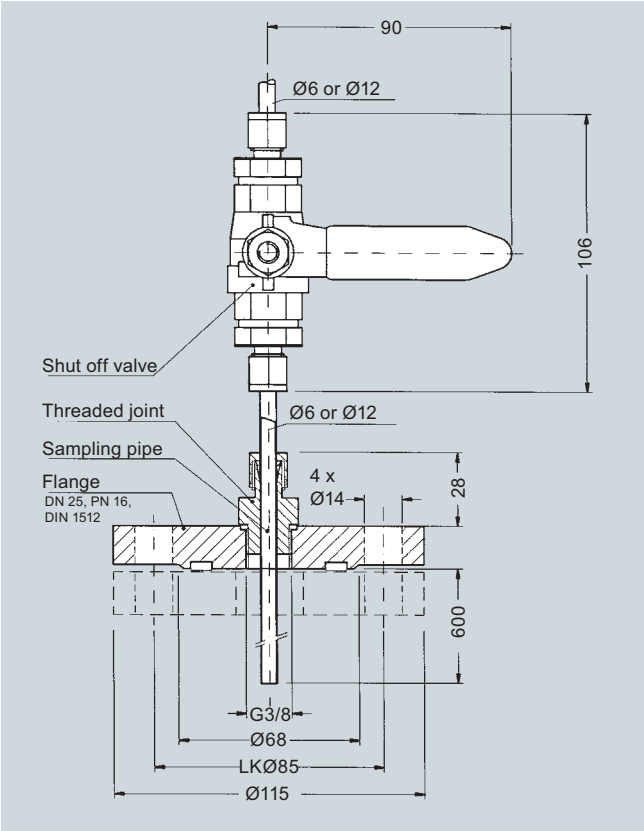

Gas sampling probe for process gas lines with shut-off valve

Gas sampling probe with external, electrically heated filter

Application

For continuous gas sampling in processes with dust loads < 2 g/m³ and an operating pressure up to 6 bar.

Design

A filter chamber heated at 180 °C contains a filter element. Self-regulating heating elements are used. A temperature controller and limiter are not required.

The parts in contact with the sample gas are made of stainless steel (mat. No. 1.4571), Viton and ceramics.

Technical specifications

Operating pressure	Max. 6 bar
Operating temperature	180 °C at ambient temperature 0 ... 80 °C
Material of filter enclosure and flange	Stainless steel (mat. no. 1.4571)
Mounting flange	DN 65, PN 6, form B
Connection of sample gas outlet	Female thread ¼ NPT
Electric connection	2 plug-in connectors
Degree of protection according to EN 60 529	IP54
Power supply	110 … 240 V AC, 50/60 Hz
Power consumption	Approx. 400 VA
Weight	Approx. 9 kg

Selection and ordering Data

	Order No.
Gas sampling probe With self-regulating heating elements, with undertemperature alarm, heated, 115 … 230 V AC, 50/60 Hz, 400 VA Complete thermal insulation with protective sleeve, without weather protection hood	**7MB1 943-2FA00**

The filter element, the screwed gland for connection of the sample gas line, and the sampling tube must be ordered separately. Also refer to the configuration example under "Accessories and configuration example".

Dimensional drawings

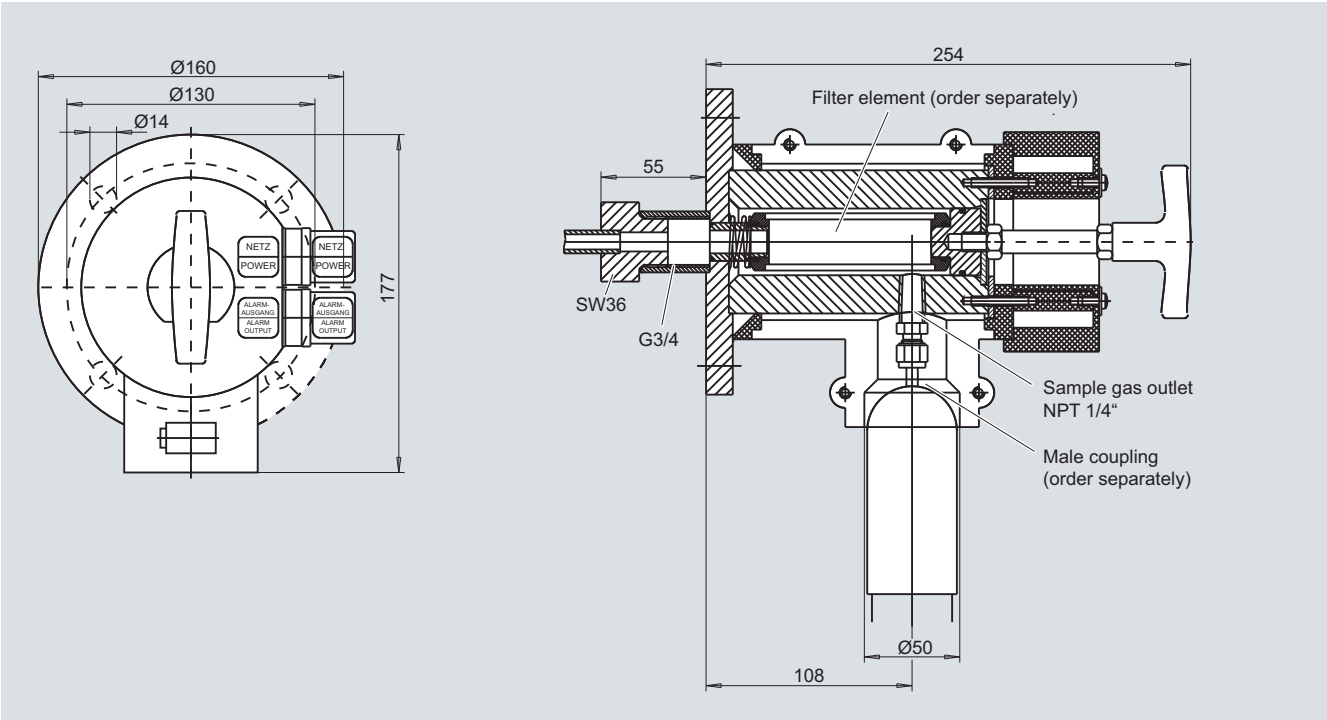

Gas sampling probe with external, electrically heated filter without weatherproof cover

Gas sampling probe with external, electrically heated filter

With temperature controller

Application

For gases with a dust concentration up to approx. 2 g/m³ and an operating pressure < 6 bar.

Design

The gas sampling probe with external, electrically heated filter has a mounting flange (DN 65 PN 6, form B) with G¾ female thread. Depending on the application, the flange can accommodate a sampling pipe or a pre-filter.

The external filter is fitted in a housing with minimum dead volume.

The filter element can be replaced quickly and easily without tools and without the need to dismantle the sample line.

The gas sampling probe is equipped with a protection hood. Optimum heating of the complete filter housing, including the mounting flange, ensures safe outdoor operation without the temperature falling below the dew point.

Special features

- Heated probe with outlet filter and weather protection hood
- Simple removal of outlet filter by rotating the handle by 90°
- The probe body and the area of the connection gland for the heated sample gas line are completely insulated
- Electronic temperature control up to 200 °C with under/overtemperature alarm and display
- For dust loads up to 2 g/m³
- This probe is not suitable for use in hazardous areas

Technical specifications

Max. permissible operating pressure	6 bar
Max. permissible probe inlet temperature	200 °C
Max. sampling temperature	1 600 °C (selection and separate ordering of a suitable sampling pipe required)
Material (filter enclosure and flange)	Stainless steel, mat. no. 1.4571
Gaskets	Graphite / 1.4404
Filter volume	120 cm³
Sample gas outlet	1 x female thread ¼ NPT
Power supply	230 V AC; 2.0 A; 50/60 Hz or 115 V AC; 3.8 A; 50/60 Hz
Temperature range of controller	50 … 200 °C
Alarm adjustable to	• ± 5 … ± 30 K of setpoint • Factory-set to ± 15 K • Switching current max. 1 A
Degree of protection according to EN 60529	IP54
Ambient temperature range	-20 … 70 °C (can be limited by mounted options)

Selection and ordering Data

	Order No.
Gas sampling probe with external filter, heated, with weatherproof cover, heating controlled by add-on controller with overtemperature and undertemperature alarm	
• 230 V AC, 50/60 Hz	**7MB1 943-2FB01**
• 115 V AC, 50/60 Hz	**7MB1 943-2FB02**

The filter element, the screwed gland for connection of the sample gas line, and the sampling tube must be ordered separately. Also refer to the configuration example under "Accessories and configuration example".

Dimensional drawings

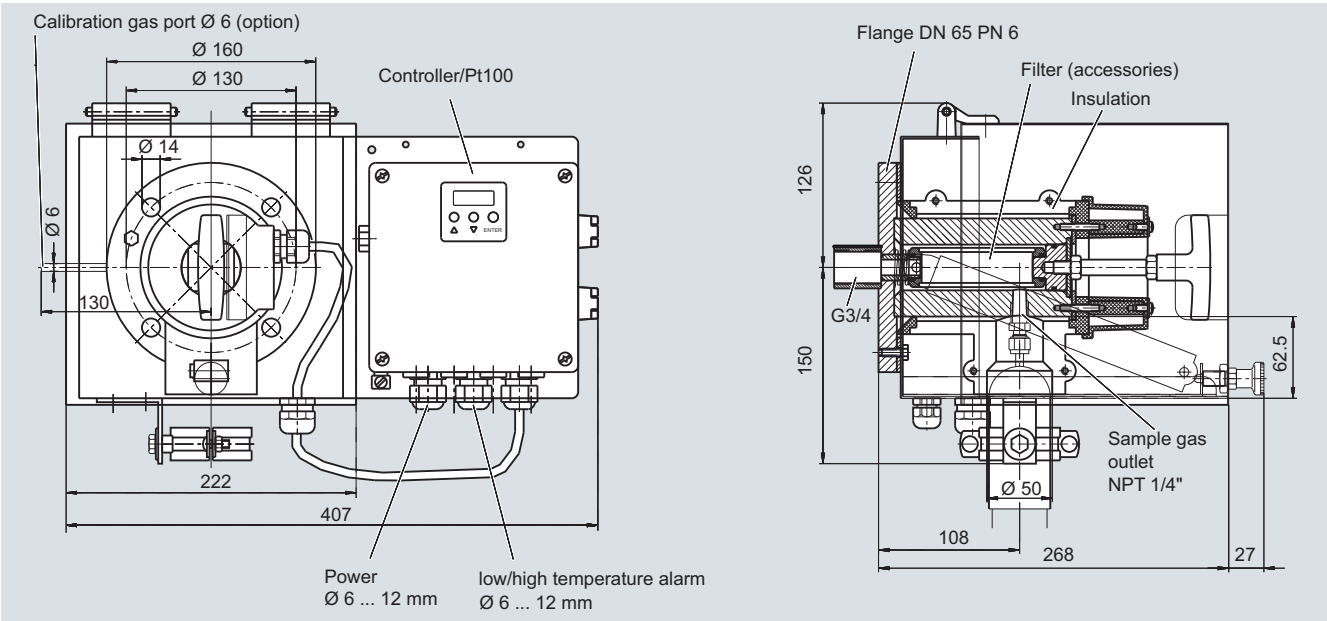

Gas sampling probe with external, electrically heated filter, weatherproof cover, and temperature controller

Gas sampling probe with external, electrically heated filter

With self-controlling heater, explosion-proof version according to ATEX

Application

For gases with a dust concentration up to approx. 2 g/m³ and an operating pressure < 6 bar.

Design

The gas sampling probe with external, electrically heated filter has a mounting flange (DN 65 PN 6, form B) with G¾ female thread. Depending on the application, the flange can accommodate a sampling pipe or a pre-filter.

The external filter is fitted in a housing with minimum dead volume.

The filter element can be replaced quickly and easily without tools and without the need to dismantle the sample line.

The gas sampling probe is equipped with a protection hood. The optimum heating of the complete filter housing, including the mounting flange, ensures safe outdoor operation without the temperature falling below the dew point.

This probe is suitable for use in Zone 1, 21 and for sampling from Zone 0, 20.
It should be noted that the permissible field of application of the probes may be limited when specially selected accessories are used.

Special features

- Heated probe with outlet filter and weather protection hood
- Simple removal of outlet filter by rotating the handle by 90°
- The probe body and the area of the connection gland for the heated sample gas line are completely insulated
- Self-regulated heating up to approx. 80 °C
- For dust loads up to 2 g/m³

Technical specifications

Max. permissible operating pressure	6 bar
Max. inlet temperature of process medium	135 °C
Max. sampling temperature	1 600 °C (selection and separate ordering of a suitable sampling pipe required)
Max. flow	1 000 l/h
Material (filter enclosure and flange)	Stainless steel, mat. no. 1.4571
Gaskets	Graphite / 1.4404
Filter volume	120 cm³
Sample gas outlet	1 x female thread ¼ NPT
Power supply	230 V AC; 50/60 Hz or 115 V AC; 50/60 Hz
External miniature circuit-breaker type C	• 2 A for 230 V; 50/60 Hz • 3 A for 115 V; 50/60 Hz
Ambient temperature range	-20 … +50°C
Temperature self-regulating	Approx. +80 °C
Ex identification of basic devices	1GD / 2GD T4 T130 °C

Selection and ordering Data

	Order No.
Gas sampling probe (Ex) Protection type 1GD / 2GD T4 T130 °C according to ATEX, with weatherproof cover and Ex junction box	
• 230 V AC, 50/60 Hz	**7MB1 943-2FC01**
• 115 V AC, 50/60 Hz	**7MB1 943-2FC02**

The filter element, the screwed gland for connection of the sample gas line, and the sampling tube must be ordered separately. Also refer to the configuration example under "Accessories and configuration example".

Dimensional drawings

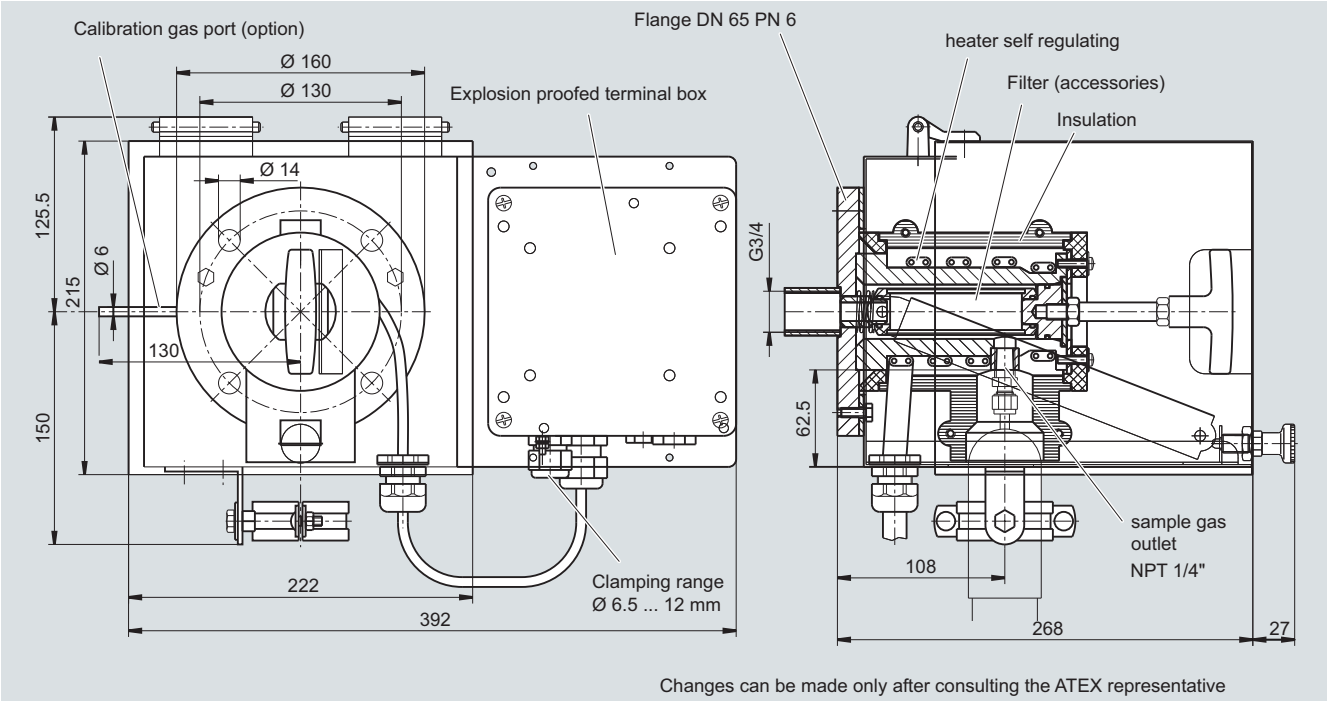

Gas sampling probe with external, electrically heated filter, weatherproof cover, and self-regulating heater, explosion-proof version according to ATEX

Gas sampling probe with external, electrically heated filter

With temperature monitoring and connection for backflushing

Application

Gas sampling probe with inlet filter for gases with a dust concentration up to approx. 20 g/m³ and a pressure < 6 bar.

Design

The gas sampling probe is suitable for use with a hot sample gas with high dust concentration. An inlet filter is attached to the G 3/4" thread in the case of sample gases with 2 to approx. 20 g dust/m³. A sampling pipe can be fitted between the inlet filter and the probe. This inlet filter is purged with instrument air in the direction of the process. The connection for the purging air is located on the probe.

Prior to purging, the outlet to the analyzer system is closed by a pneumatically driven ball valve.

A high or low temperature alarm is output via an isolated changeover contact. This alarm can be set to ± 5 °C, ± 10 °C or ± 15 °C. A minimum dead volume in the probe permits a short T90 time for the measuring equipment. The filter element in the probe can be replaced quickly and easily without tools and without the need to dismantle the sample line. The probe has a weatherproof cover.

Technical specifications

Sampling pressure	Max. 6 bar
Filter enclosure and flange	Stainless steel, mat. no. 1.4571
Filter volume	120 cm³
Sample gas outlet	1 x female thread ¼ NPT
High-performance heating cartridge	
Heating voltage	230 V AC, 50/60 Hz, 440 VA or 115 V AC, 60 Hz, 425 VA
Temperature setting range	Up to 200 °C
Load capacity of temperature alarm contact	230 V AC, 3 A or 230 V DC, 0.25 A
Mounting flange	DN 65, PN 6, form B, mat. no. 1.4571

Selection and ordering Data

	Order No.
Gas sampling probe with pneumatically driven shut-off valve, weatherproof cover, regulated heating with alarm output and backflushing connection, distribution of instrument air 230 V AC, 50/60 Hz, 440 VA	**7MB1 943-2FF01**
Heated compressed air vessel Hot purging air prevents cooling down of the inlet filter and condensation of the sample gas 115 ... 220 V AC, 50/60 Hz	**7MB1 943-2FF03**

The filter element, the screwed gland for connection of the sample gas line, and the sampling tube or inlet filter must be ordered separately.

Dimensional drawings

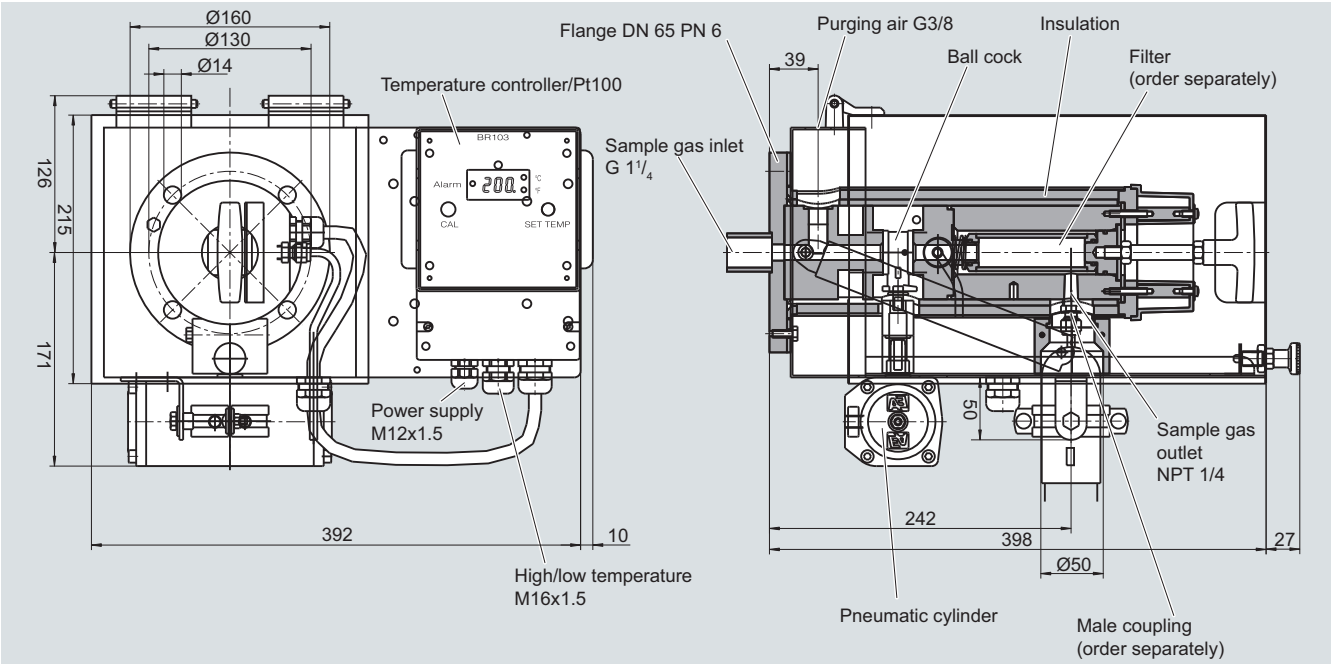

Gas sampling probe with external, electrically heated filter, weatherproof cover and backflushing connection, ball valve

Design

Depending on the application, a complete gas sampling probe comprises:

- An internal inlet filter
- Sampling pipe
- Probe body with external filter

Each component is selected individually. The following table will help you to select the components. In addition to the dust concentration, the temperature and corrosiveness of the media are criteria for selecting the probe components.

Further special versions are available on request.

	Dust	Sample gas		Installation		Probe type
	in the sample gas	Wet	Dry	Indoors	Outdoors	
1	< 20 mg/m³		x	x	x	7MB1 943-1EA01/02
2	< 2 g/m³	x	x	x		7MB1 943-2FA00
3	< 2 g/m³	x	x		x	7MB1 943-2FB01/02
4	< 20 g/m³	x	x	x	x	7MB1 943-2FF01 with 7MB1 943-2FE14 7MB1 943-2FE04 (up to 600 °C)

For applications 2-3, add: sampling pipe, e.g. 7MB1 943-2FE12

For applications 2-4, add: external filter, e.g. 7MB1 943-2FE20

Selection table for sampling probes

Selection and ordering Data

	Order No.
External filters including O-rings	
Ceramic filter, pore size 2 µm	**7MB1 943-2FE20**
Filter made of sintered stainless steel, pore size 5 µm	**7MB1 943-2FE21**
Filter made of bent stainless steel fabric, pore size 10 µm	**7MB1 943-2FE22**
Internal filters	
Up to < 10 g/m³ dust: Filter made of sintered stainless steel, L = 235 mm, gas temperature up to 600 °C	**7MB1 943-2FE03**
Up to < 20 g/m³ dust: Filter made of sintered stainless steel, L = 538 mm, connection G¾", gas temperature up to 600 °C	**7MB1 943-2FE04**
For high-temperature applications: Filter made of ceramic, L = 500 mm, connection G¾", gas temperature up to 1 000 °C, with adapter flange DN 65 PN 6	**7MB1 943-2FE07**
Screw-in fitting	
for connecting a steel pipe to the probe	
• For 6 mm outer diameter	**7MB1 943-2DA20**
• For 8 mm outer diameter	**7MB1 940-6AA01**
Supporting sleeve for screw-in fitting	
is required in addition to the supporting sleeve to secure a PTFE hose to the probe	
• Supporting sleeve for 6 mm threaded joint	**7MB1 943-2DA10**
• Supporting sleeve for 8 mm threaded joint	**7MB1 940-6AB01**

	Order No.
Sampling pipes	
Sampling pipe made of stainless steel, L = 1 000 mm, D = 20 mm, gas temperature up to 600 °C, without connection for internal filter	**7MB1 943-2FE12**
Sampling pipe made of ceramics, L = 1 000 mm, D = 24 mm, gas temperature up to 1 600 °C, without connection for internal filter	**7MB1 943-2FE02**
Sampling pipe made of Inconel 600, L = 1 000 mm, D = 21.3 mm, gas temperature up to 1 050 °C, without connection for internal filter	**7MB1 943-2FE08**
Sampling pipe made of Hastelloy C4, L = 1 000 mm, D = 12 mm, gas temperature up to 400 °C, without connection for internal filter	**7MB1 943-2FE06**
Replacement O-rings for probe and internal filter, 1 set	**7MB1 943-2FE23**
Protection plate	
Plate as mechanical protection for internal filter	
Material: Stainless steel	
• For filter 7MB1 943-2FE04	**7MB1 943-2FE14**

Sample gas pumps

2

2/2	Diaphragm pump with metal-free gas ducts
2/3	Corrosion-resistant bellows pump
2/4	Corrosion-resistant bellows pump with intermediate flange
2/6	Corrosion-resistant bellows pump, explosion-proof version
2/8	Corrosion-resistant bellows pump, explosion-proof design, with interme-diate flange
2/10	Corrosion-resistant sample gas pump with high capacity

Diaphragm pump with metal-free gas ducts

Application

Suction or pressure driven handling of sample and reference gases. For mounting in analyzer cabinets.

Technical specifications

Pump capacity	See graphic "Diaphragm pump, capacity"
Materials	
• Diaphragm and valve reed	EPDM
• Gas couplings	Polyvinylidene fluoride (PVDF)
• Pump manifold	PVDF
Max. permissible ambient temperature	50 °C
Degree of protection acc. to EN 60529	IP20
Power supply	See ordering data
Power consumption	6.5 VA, approx. 45 mA at 230 V AC, 50 Hz
Weight	Approx. 1.2 kg

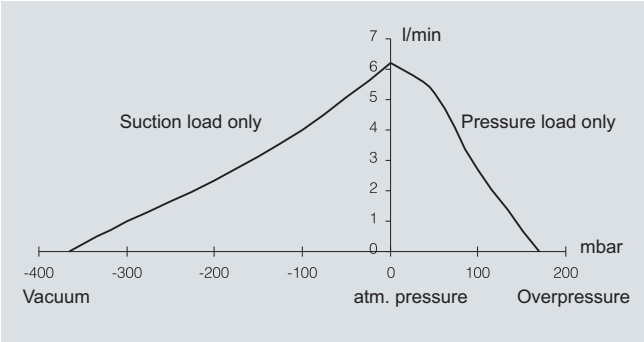

Diaphragm pump, capacity

Selection and ordering Data

	Order No.
Diaphragm pump with pump suspension and metal-free gas ducts	
Without enclosure	
• Power supply 230 V AC, 50 Hz	**7MB1 943-3AA00**
Set of consumable parts (diaphragm, valve reed, and gaskets)	**7MB1 943-3AA04**
PVDF fitting for S1 connection	See under "Components for sample preparation/connection elements made of PVDF"
Pump controller	
For mounting on a 35 mm rail	
• 230 V AC	**7MB1 943-3AA02**

Dimensional drawings

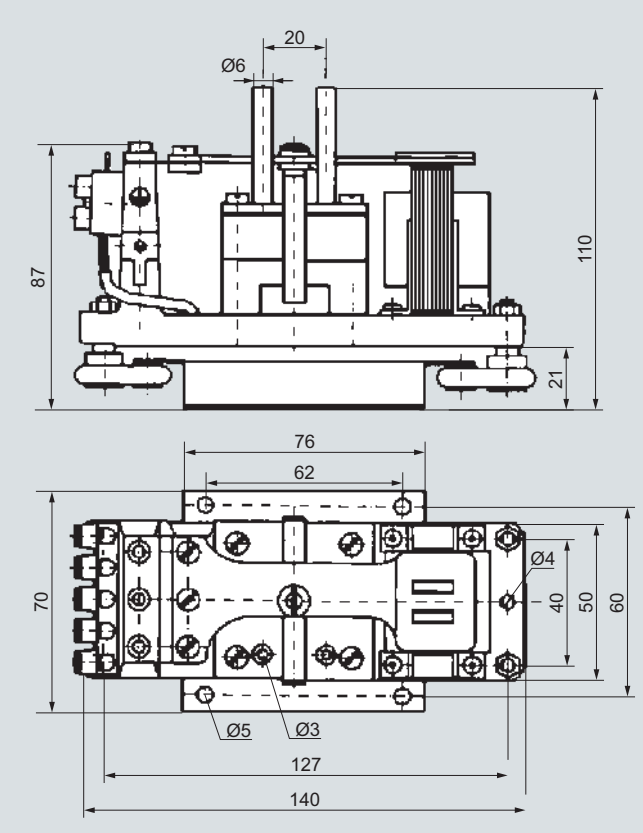

Diaphragm pump with metal-free gas ducts and pump suspension

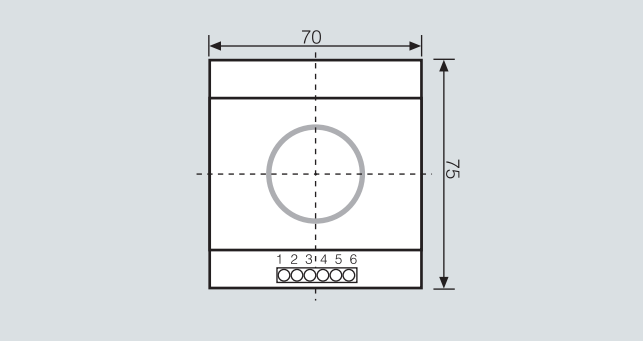

Pump controller

Application

Transportation of corrosive gases at temperatures up to 100 °C.

Special features

- Suitable for continuous operation
- PTFE (Teflon) and PVDF as the wetted parts materials
- Integrated bypass
- Simple, robust design
- Easy to replace valves
- Bellows made of one solid piece
- Pumps sample gases containing condensation
- Long service life

ATEX version of this pump available, see "Corrosion-resistant bellows pump, explosion-proof design".

Technical specifications

Pump capacity	• See graphic "Corrosion-resistant bellows pump, capacity" • Adjustable using built-in bypass valve
Operating pressure on the output side	Max. 1.5 bar overpressure
Permissible gas temperature	Max. 100 °C
Permissible ambient temperature	Max. 60 °C
Degree of protection acc. to EN 60529	• IP55 (electrical) • IP20 (mechanical)
Power supply	Either 230 V AC or 115 V AC; see ordering data
Connection	• For PTFE hose DN 4/6 (with 230 V AC version) • For PTFE hose ¼" (with 115 V AC version)
Dimensions	See dimensional drawing
Weight	6.5 kg
Scope of delivery	• 1 x sample gas pump with motor • 4 x rubber/metal buffer • 1 x motor console made of 1.4301
Parts wetted by medium	PTFE (Teflon) and PVDF

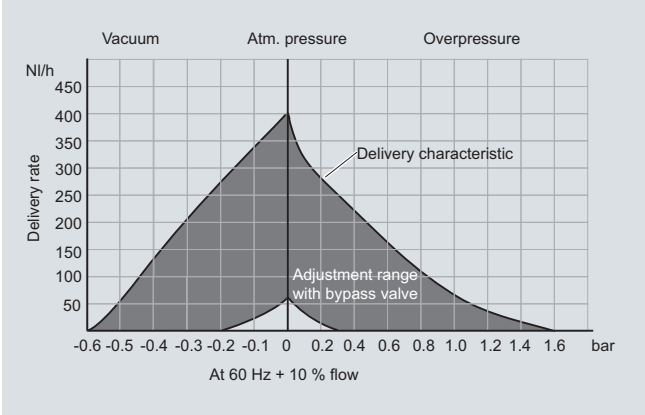

Corrosion-resistant bellows pump, capacity

Selection and ordering Data

	Order No.
Corrosion-resistant bellows pump with pump support	
• Power supply 230 V AC, 50/60 Hz; 0.85/0.8 A	**7MB1 943-3CA10**
• Power supply 115 V AC, 50/60 Hz; 1.7/1.6 A	**7MB1 943-3CA20**
Spare parts	
Valve (2 units required), material: PTFE/PVDF	**7MB1 943-3CA15**
PTFE bellows, complete	**7MB1 943-3CA16**
Eccentric and plunger with ball bearing	**7MB1 943-3CA17**

Further pump versions, also with head made of stainless steel, mat. no. 1.4571, are available on request.

Dimensional drawings

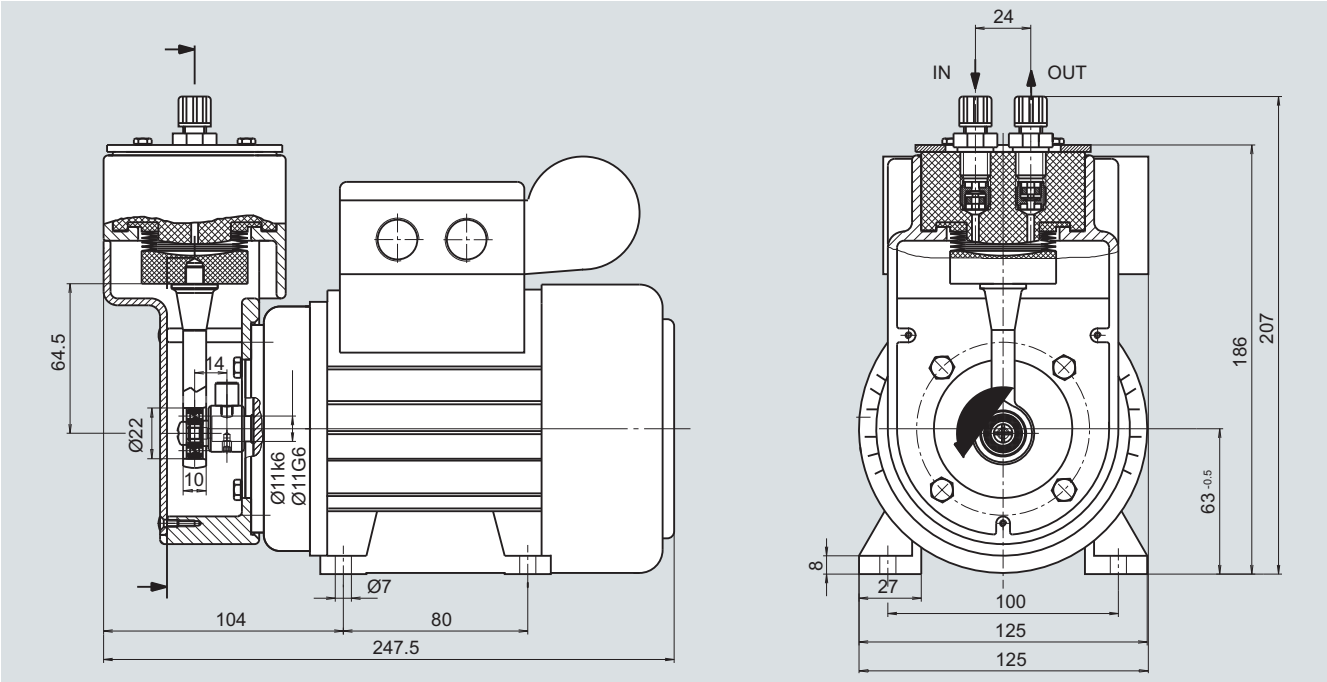

Corrosion-resistant bellows pump

Corrosion-resistant bellows pump with intermediate flange

Application

Transportation of corrosive gases at temperatures up to 160 °C.

To facilitate use in hot applications, the pump head and drive motor can be installed separate from each other. The pump has a transfer flange designed in two parts; one half is installed in a heated cabinet, and the other half - carrying the drive motor - is mounted on the outside. An additional motor console is not provided. If the wall stability is insufficient, it should be mechanically strengthened prior to installation of the pump.

Pump without bypass.

The pump should be installed horizontally.

The pump head can be rotated as required when installing. If the gas carries condensation, the pump must be installed with the valves pointing downward.

Special features

- Suitable for continuous operation
- PTFE (Teflon) and PEEK as the wetted parts materials
- Simple, robust design
- Easy to replace valves
- Bellows made of one solid piece
- Pumps sample gases containing condensation
- Long service life
- When installing the pump head in a cabinet, the wall thickness may be up to 30 mm.

ATEX version of this pump available, see "Corrosion-resistant bellows pump, explosion-proof design with intermediate flange".

Technical specifications

Pump capacity	• See graphic "Corrosion-resistant bellows pump, capacity" • Fixed
Operating pressure on the output side	Max. 1.5 bar overpressure
Permissible gas temperature	Max. 160 °C
Max. permissible ambient temperature	• 60 °C (motor) • 100 °C (pump head)
Degree of protection acc. to EN 60529	• IP55 (electrical) • IP20 (mechanical)
Power supply	Either 230 V AC or 115 V AC; see ordering data
Connection	• For PTFE hose DN 4/6 (with 230 V AC version) • For PTFE hose 1/4" / 1/6" (with 115 V AC version)
Dimensions	See dimensional drawing
Weight	7.5 kg
Scope of delivery	• 1 x pump head with intermediate flange • 1 x motor • 1 x coupling flange • 1 x coupling (2 x hub,1 x ring gear) • 4 x bolts M6 x 16 • 1 x mounting ring
Parts wetted by medium	PTFE (Teflon) and PEEK

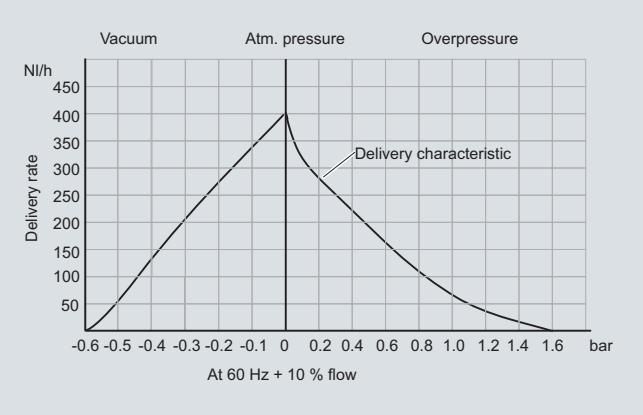

Corrosion-resistant bellows pump with intermediate flange, capacity

Selection and ordering Data

	Order No.
Corrosion-resistant bellows pump with intermediate flange	
• Power supply 230 V AC, 50/60 Hz; 0.85/0.8 A	**7MB1 943-3CA21**
• Power supply 115 V AC, 50/60 Hz; 1.7/1.6 A	**7MB1 943-3CA22**
Spare parts	
Set of 2 valves, material: PTFE/PEEK	**7MB1 943-3CA18**
PTFE bellows, complete	**7MB1 943-3CA16**
Eccentric and plunger with ball bearing	**7MB1 943-3CA17**

Further pump versions, also with head made of stainless steel 1.4571, are available on request.

Dimensional drawings

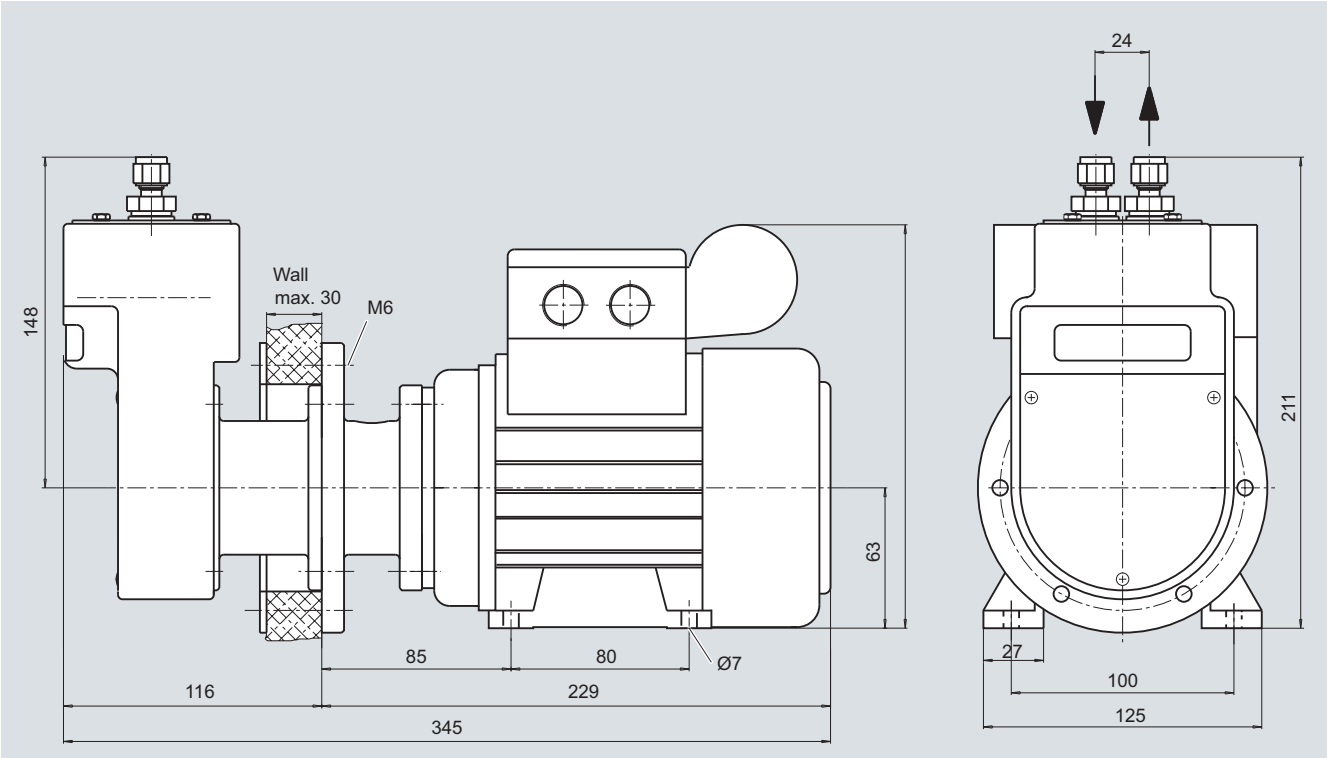

Corrosion-resistant bellows pump with intermediate flange

Corrosion-resistant bellows pump, explosion-proof version

Application

Transportation of corrosive gases.

Motors of explosion-proof design are used as the drive.

Special features

- ATEX version for category 2
- Suitable for continuous operation
- PTFE (Teflon) and PVDF as the wetted parts materials
- Integrated bypass
- Simple, robust design
- Easy to replace valves
- Bellows made of one solid piece
- Pumps sample gases containing condensation
- Long service life

Technical specifications

Pump capacity	See graphic "Corrosion-resistant bellows pump, explosion-proof design, capacity"
Operating pressure on the output side	Max. 1.5 bar overpressure
Max. permissible gas temperature	• 140 °C for non-flammable gases and T3 • 120 °C for non-flammable gases and T4 • 120 °C for flammable gases above the LEL and T3 • 50 °C for flammable gases above the LEL and T4
Max. permissible ambient temperature	50 °C
Degree of protection acc. to EN 60529	• IP55 (electrical) • IP20 (mechanical)
Types of protection of explosion-proof pump	Ex II 2G EEx c IIC T1-T4 (pump head) and 2G EEx e II T1-T4 (motor)
EC Type-Test Certificate of motor	PTB 02 ATEX 3147
Power supply	See ordering data
Connection	For PTFE hose DN 4/6
Dimensions	See dimensional drawing
Weight	7.5 kg
Scope of delivery	• 1 x sample gas pump with motor • 2 x screw-in fittings • 4 x rubber/metal buffer • 1 x motor console made of 1.4301
Parts wetted by medium	PTFE (Teflon) and PVDF

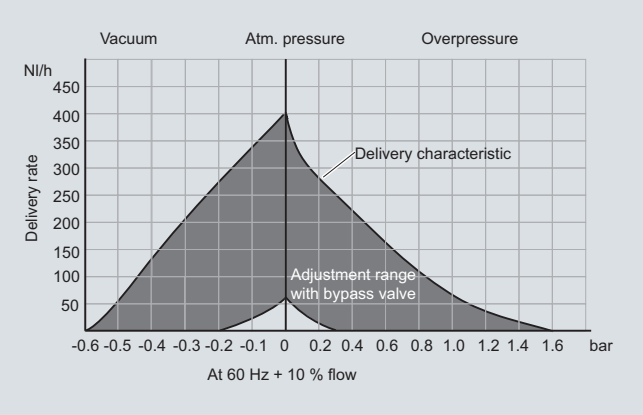

Corrosion-resistant bellows pump, explosion-proof design, capacity

Selection and ordering Data

	Order No.
Corrosion-resistant bellows pump, explosion-proof version	
2GEEx e II T1-T4, with pump support	
• Power supply 230 V AC, 50 Hz, 0.88 A	**7MB1 943-3CA23**
• Power supply 115 V AC, 50 Hz, 1.76 A	**7MB1 943-3CA24**
Spare parts	
Valve (2 units required), material: PTFE/PVDF	**7MB1 943-3CA15**
PTFE bellows, complete	**7MB1 943-3CA16**
Eccentric and plunger with ball bearing	**7MB1 943-3CA17**

Further pump versions, also with head made of stainless steel 1.4571, are available on request.

Please note:
Motors in the hazardous area require approved protective equipment (motor circuit-breaker) which is not included in the scope of delivery.

Dimensional drawings

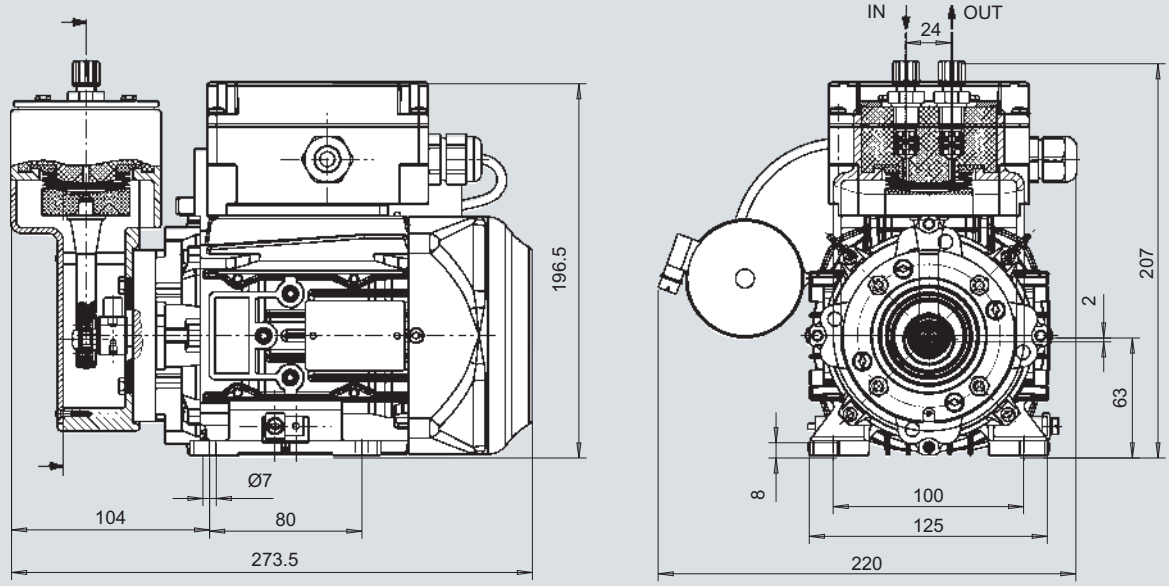

Changes can be made only after consulting the ATEX representative.

Corrosion-resistant bellows pump, explosion-proof design

Corrosion-resistant bellows pump, explosion-proof design, with intermediate flange

Application

Transportation of corrosive gases.

Motors of explosion-proof design are used as the drive.

To facilitate use in hot applications, the pump head and drive motor can be installed separate from each other. The pump has a transfer flange designed in two parts; one half is installed in a heated cabinet, and the other half - carrying the drive motor - is mounted on the outside. An additional motor console is not provided. If the wall stability is insufficient, it should be mechanically strengthened prior to installation of the pump.

Pump without bypass.

The pump should be installed horizontally.

The pump head can be rotated as required when installing. If the gas carries condensation, the pump must be installed with the valves pointing downward.

Special features

- ATEX version for category 2
- Suitable for continuous operation
- PTFE (Teflon) and PEEK as the wetted parts materials
- Simple, robust design
- Easy to replace valves
- Bellows made of one solid piece
- Pumps sample gases containing condensation
- Long service life
- When installing the pump head in a cabinet, the wall thickness may be up to 30 mm

Technical specifications

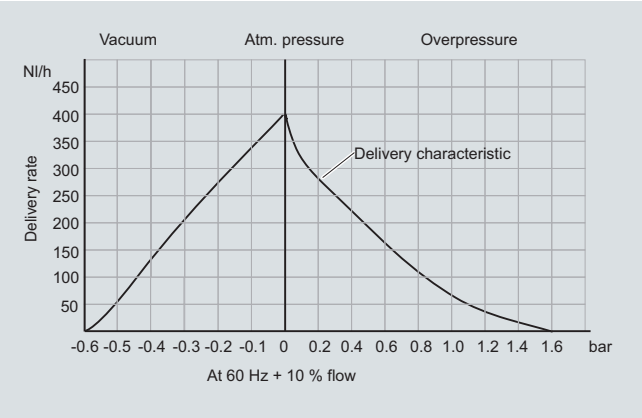

Corrosion-resistant bellows pump, explosion-proof design, with intermediate flange, capacity

Pump capacity	• See graphic "Corrosion-resistant bellows pump, explosion-proof design with intermediate flange, capacity" • Fixed
Operating pressure on the output side	Max. 1.5 bar overpressure
Max. permissible gas temperature and associated pump head temperature	• 120 °C for non-flammable gases and T3 (pump head max. 100 °C) • 80 °C for non-flammable gases and T4 (pump head max. 80 °C) • 100 °C for flammable gases and T3 (pump head max. 80 °C) • 50 °C for flammable gases and T4 (pump head max. 50 °C)
Max. permissible ambient temperature	• 50 °C (motor) • 50 … 100 °C (pump head), dependent on the type of gas and gas temperature (see previous line)
Degree of protection acc. to EN 60529	• IP55 (electrical) • IP20 (mechanical)
Types of protection of explosion-proof pump	Ex II 2G EEx c IIC T1-T4 (pump head) and 2G EEx e II T1-T4 (motor)
EC Type-Test Certificate of motor	PTB 02 ATEX 3147
Power supply	See ordering data
Connection	For PTFE hose DN 4/6
Dimensions	See dimensional drawing
Weight	8.5 kg
Scope of delivery	• 1 x pump head with intermediate flange • 1 x motor • 1 x coupling flange • 1 x coupling (2 x hub,1 x ring gear) • 4 x bolts M6 x 16 • 1 x mounting ring
Parts wetted by medium	PTFE (Teflon) and PEEK

Selection and ordering Data

	Order No.
Corrosion-resistant bellows pump, explosion-proof version	
2GEEx e II T1-T4, with intermediate flange	
Power supply 230 V AC, 50 Hz, 0.88 A	**7MB1 943-3CA25**
Power supply 115 V AC, 50 Hz, 1.76 A	**7MB1 943-3CA26**
Spare parts	
Set of 2 valves, material: PTFE/PEEK	**7MB1 943-3CA18**
PTFE bellows, complete	**7MB1 943-3CA16**
Eccentric and plunger with ball bearing	**7MB1 943-3CA17**

Further pump versions, also with head made of stainless steel mat. no. 1.4571, are available on request.

Please note:
Motors in the hazardous area require approved protective equipment (motor circuit-breaker) which is not included in the scope of delivery.

Corrosion-resistant bellows pump, explosion-proof design, with intermediate flange

Dimensional drawings

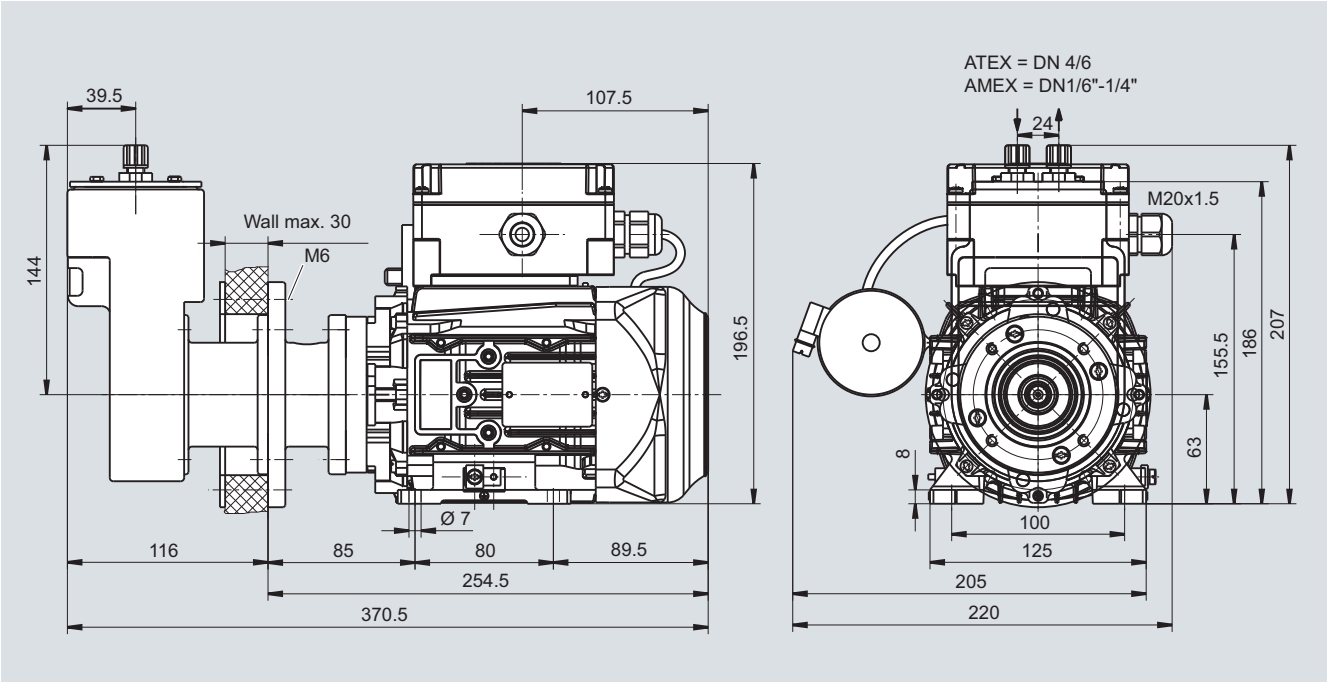

Corrosion-resistant bellows pump, explosion-proof design, with intermediate flange

Corrosion-resistant sample gas pump with high capacity

Application

Transportation of corrosive gases at temperatures up to 40 °C with large volume flows.

Special features

- High capacity
- Capacity adjustable using built-in bypass valve
- Pump head pointing downwards with gas inlet and outlet from below
- Suitable for continuous operation
- Parts wetted by medium made of PTFE and FFPM
- Diaphragm pump

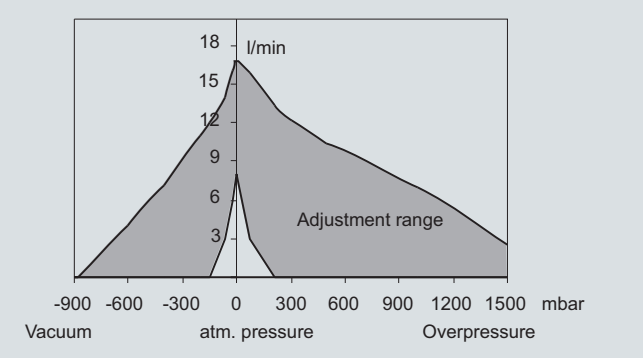

Corrosion-resistant sample gas pump, capacity

Technical specifications

Capacity at atmospheric pressure of pump without explosion protection 7MB1 943-3CB01	Adjustable from 402 ... 960 l/h at standard temperature and pressure
Capacity at atmospheric pressure of pump in explosion-proof design 7MB1 943-3CB11	Adjustable from 402 … 780 l/h at standard temperature and pressure
Final vacuum	125 mbar a
Max. operating overpressure on the output side	1.5 bar g
Temperature of medium	5 ... 40 °C
Permissible ambient temperature	5 ... 40 °C
Gas connection	R¼"
Power supply	230 V AC, 50 Hz
Parts wetted by medium	
• Head parts	PTFE
• Diaphragm	PTFE-coated
• Valves	FFPM
EU Type-Test Certificate of motor with explosion-proof design 7MB1 943-3CB11	EX5 02 08 45055 002

Selection and ordering Data

	Order No.
Corrosion-resistant sample gas pump	
Degree of protection IP44, with pump holder	**7MB1 943-3CB01**
Corrosion-resistant sample gas pump, explosion-proof version	
Degree of protection IP44, with pump holder; EEx e II T3 to ATEX	**7MB1 943-3CB11**
Spare parts	
Diaphragm	**7MB1 943-3CB17**
Valve reed	**7MB1 943-3CB18**

Further pump versions available on request.

Please note:
Motors in the hazardous area require approved protective equipment (motor circuit-breaker) which is not included in the scope of delivery.

Dimensional drawings

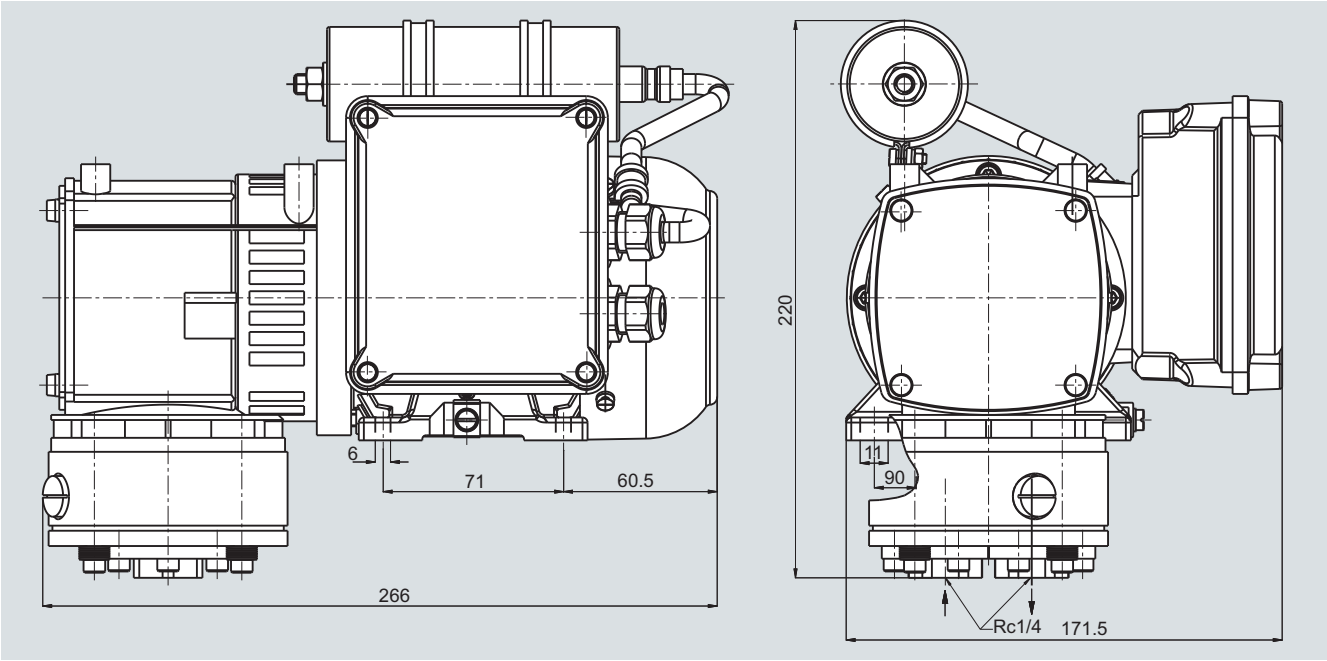

Korrosionsfeste Messgaspumpe in Ex-Ausführung

Heated sample gas lines

3

3/2 **Temperature-controlled, heated sample gas lines**

3/2 Non-replaceable Teflon core Max. 120 °C, can be shortened

3/3 Non-replaceable Teflon core Max. 200 °C

3/4 Non-replaceable Teflon core, Max. 190 °C for FIDAMAT total hydrocarbon analyzer

3/5 **Temperature-controlled, heated sample gas filter**

3/5 Max. 180 °C, for FIDAMAT total hydrocarbon analyzer

Temperature-controlled, heated sample gas lines

Non-replaceable Teflon core
Max. 120 °C, can be shortened

Design

Hose connection and termination	Silicone end cap
Heating	Heating band, routed in parallel
Thermal insulation	Thermo-fleece (CFC-free, flame retardant)
Outer sheath	Polyamide corrugated hose PA12 black, waterproof, flame retardant acc. to UL94 HB, thermally stable from -50 … +120 °C, short-term +150 °C
Temperature sensor	Pt100 in 2-wire system
Heat conductor/PE conductor	Copper braiding
Power supply connection	Power supply and sensor cables with common outlet, end sleeves, l = 3 000 mm
Implemented tests	acc. to VDE 0721 Part 1 • High-voltage test • Insulation resistance test

Technical specifications

Max. permissible operating temperature	
• Switched on	120 °C
• Switched off	200 °C
Max. length of heating circuit	100 m
Max. production length	100 m
Distance between contacts	0.6 m
Safety class	I
Degree of protection	IP54
Outer diameter	Approx. 43 mm
Smallest bending radius	300 mm
Max. permissible operating pressure	6 bar for DN (NW) 4, 4 bar for DN (NW) 6; at 200 °C
Power supply	230 V AC, 50 Hz
Rated power	40 W/m
Weight (heating hose)	Approx. 0.8 kg/m

Dimensional drawings

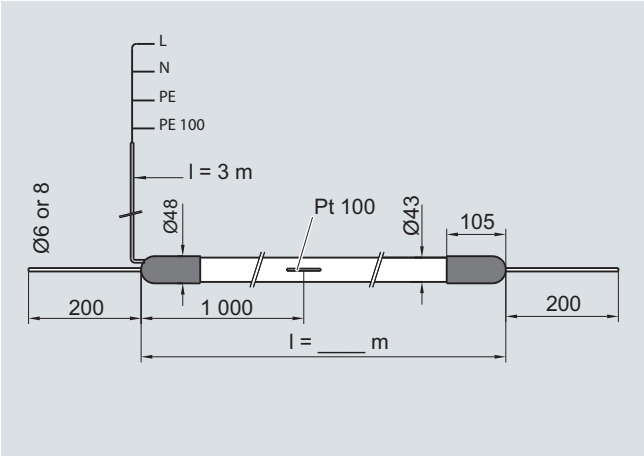

Temperature-controlled, heated sample gas line for operating temperatures up to max. 120 °C, non-replaceable Teflon core, can be shortened

Selection and ordering Data

Note

The complete ordering data for a heated sample gas line must include both items I and II.

	Order No.
Item I	
Preassembled pack for temperature-controlled, heated sample gas line for operating temperatures up to 120 °C; can be shortened (delivery unit 1 line)	**7MB1 943-2AB13**
Both ends preassembled, with PTFE hose	
Non-replaceable Teflon core, with 1 Pt100 temperature sensor	
Item II	
Length-dependent data (delivery unit 1 m)	
Outer sheath Polyamide corrugated hose (PA12)	
Hose	
• PTFE hose 4/6 mm	**7MB1 943-2AB10**
• PTFE hose 6/8 mm	**7MB1 943-2AB12**
Temperature-controlled, heated sample gas line for operating temperatures up to 120 °C; can be shortened	
Neither end preassembled, with PTFE hose, with 1 Pt100 temperature sensor	
Outer sheath Polyamide corrugated hose (PA12)	
Hose	
• PTFE hose 4/6 mm	**7MB1 943-2AB14**
• PTFE hose 6/8 mm	**7MB1 943-2AB16**
Preassembled pack for connection of heated sample gas line (cabinet end)	**7MB1 943-2AB20**
Comprising: • 1 silicon end cap • 1 connections set for heating band • 1 Pt 100 temperature sensor	
Preassembled pack for connection of heated sample gas line (sampling end)	**7MB1 943-2AB22**
Comprising: • 1 silicon end cap • 1 connections set for heating band	
Temperature-resistant adhesive tape (33 m)	**7MB1 943-2AB24**
Note: 10 m are required to assemble a hose	
Silicone adhesive (1 tube)	**7MB1 943-2AB26**
Note: Half a tube is required to assemble a hose	
Recommended temperature controller	**3RS1 042-1GW70**

Design

Internal hose (type)	Hose with Teflon (PTFE) core, stainless steel braiding
Connection fittings at inlet and outlet	Connection sleeves RSL at both ends, mat. no. 1.4571, for ferrule
Hose connection and termination	Silicone end cap
Heat conductor	Moisture-proof, PTFE isolated, braided by PE conductor
Thermal insulation	Thermo-fleece (CFC-free, flame retardant)
Outer sheath	Polyamide corrugated hose PA12 black, waterproof, flame retardant acc. to UL94 HB, thermally stable from -50 … +120 °C, short-term +150 °C
Temperature sensor	Pt100 in 2-wire system (Pt100 resistance thermometer)
Power supply connection	Power supply and sensor cables with common outlet, end sleeves, l = 3 000 mm
Implemented tests	acc. to VDE 0721 Part 1 • High-voltage test • Insulation resistance test

Technical specifications

Max. permissible operating temperature	200 °C
Max. length of heating circuit	54 m
Max. production length	54 m
Safety class	I
Degree of protection	IP54
Smallest bending radius	300 mm
Max. permissible operating pressure	30 bar
Power supply	230 V AC, 50 Hz
Rated power	100 W/m
Weight (heating hose)	Approx. 0.8 kg/m

Dimensional drawings

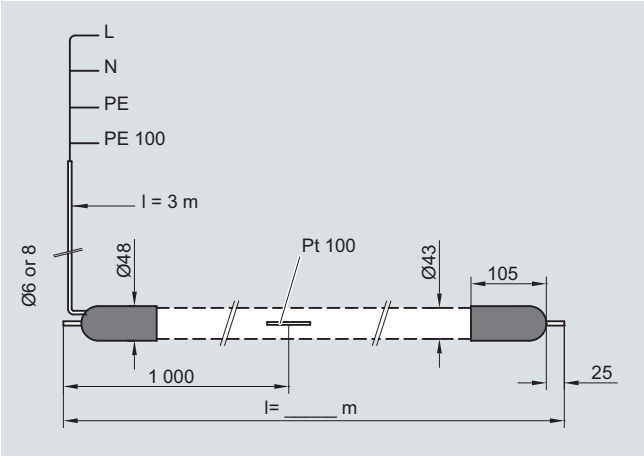

Temperature-controlled, heated sample gas line for operating temperatures up to max. 200 °C, non-replaceable Teflon core

Selection and ordering Data

Note

The complete ordering data for a heated sample gas line must include both items I and II.

	Order No.
Item I	
Preassembled pack for temperature-controlled, heated sample gas line for operating temperatures up to 200 °C (delivery unit 1 unit) Non-replaceable Teflon core, with 1 Pt100 temperature sensor	**7MB1 943-2BA00**
Item II	
Length-dependent data (delivery unit 1 m)	
Outer sheath Polyamide corrugated hose (PA12)	
Hose	
• PTFE hose 4/6 mm	**7MB1 943-2AA01**
• PTFE hose 6/8 mm	**7MB1 943-2AA02**
Temperature sensor mounting point Measured from the electrical connection side (standard) or specified in plain text:	Sensor 1: 1 m Sensor 1: ..... m
2nd temperature sensor	On request
2nd heating circuit	On request
Recommended temperature controller	**3RS1 042-1GW70**

Example for ordering

The following is required:

Temperature-controlled, heated sample gas line for operating temperatures up to 200 °C, with straight connection fittings at both ends, outer sheath made of corrugated hose PA12, PTFE hose 4/6 mm, 10 m long

Order as follows:

7MB1 943-2BA00 + 10 x 7MB1 943-2AA01

Temperature-controlled, heated sample gas lines

Non-replaceable Teflon core, Max. 190 °C for FIDAMAT total hydrocarbon analyzer

Design

Internal hose	PTFE hose, single stainless steel braiding
Connection fittings at inlet and outlet	Connecting sleeves RSL at both ends, mat. no. 1.4571
Hose connection and termination	Silicone end cap
Heat conductor	PTFE-insulated with PE braiding, moisture-proof
Thermal insulation	Thermo-fleece (CFC-free, flame retardant), silicone foam hose as sheath
Temperature sensor	Pt100 in 2-wire system
Power supply connection	Power supply and sensor cables with common outlet, l = 3 000 mm, silicone protective hose, end sleeves
Implemented tests	acc. to VDE 0721 Part 1 • High-voltage test • Insulation resistance test

Technical specifications

Max. permissible operating temperature	190 °C
Max. production length	5 m
Safety class	I
Degree of protection	IP54
Outer diameter	Approx. 33 mm
Smallest bending radius	200 mm
Max. permissible operating pressure	10 bar
Power supply	230 V AC, 50/60 Hz
Rated power	100 W/m
Only for indoor use	

Selection and ordering Data

Note

The complete ordering data for a heated sample gas line must include both items I and II.

	Order No.
Item I	
Preassembled pack for temperature-controlled, heated sample gas line for operating temperatures up to 190 °C (delivery unit 1 unit)	
Non-replaceable Teflon core, with 1 Pt100 temperature sensor, at analyzer end with right-angled sample gas outlet	
• For PTFE hose 4/6 mm	**7MB1 943-2AA74**
• For PTFE hose 6/8 mm	**7MB1 943-2AA75**
Item II	
Length-dependent data (minimum length 0.5 m, can be ordered in increments of 0.1 m)	
Model a Outer sheath: silicone foam hose Hose: PTFE hose 4/6 mm	**7MB1 943-2AA76**
Model b As model a, except hose: PTFE hose 6/8 mm	**7MB1 943-2AA77**
Recommended temperature controller	**3RS1 042-1GW70**

Dimensional drawings

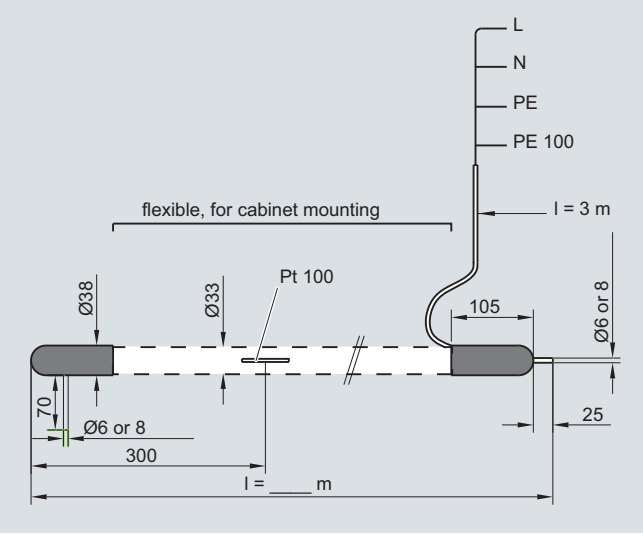

Temperature-controlled, heated sample gas line for operating temperatures up to max. 190 °C, non-replaceable Teflon core (for FIDAMAT total hydrocarbon analyzer)

Temperature-controlled, heated sample gas filter

Max. 180 °C, for FIDAMAT total hydrocarbon analyzer

Application

The electrically heated filter separates off solids occurring in analysis techniques up to a maximum operating temperature of 180 °C. It offers an additional unheated and filter-free outlet for cold measurements.

Design

The universal filter made of temperature-resistant PTFE with integrated filter element is located in a two-part aluminum body. The temperature is controlled by means of a heating cartridge and an adjustable thermostat including overtemperature limiter and undertemperature alarm at 30 °C above and below the reference temperature respectively. The switching element of the thermostat as well as the electrical terminals are located in a junction box. The operating temperature of the filter is displayed on a thermometer. For thermal insulation reasons and as protection against accidental contact, the heated filter part is covered by an insulated cap. To prevent cold points, the connection glands are also heated. The pipe clamps present on both sides serve to support the hoses. The unheated output is located upstream of the filter element in the gas flow direction. Depending on the requirements, the cold gas stream therefore needs to be filtered in the cold sample conditioning system.

Technical specifications

Max. permissible operating temperature	180 °C
Max. permissible ambient temperature	50 °C
Degree of protection	IP44
Filter material	PTFE
Filter fineness	2 µm
Dead volume	65 cm^3
Filter surface	70 cm^2
Max. permissible operating pressure	4 bar
Power supply	230 V AC, 50 Hz
Rated power	350 VA
Type of mounting	Wall mounting

Selection and ordering Data

	Order No.
Electrically heated sample gas filter up to max. 180 °C "FIDAMAT"	
Gas inlet on left	**7MB1 943-2AA80**
Gas inlet on right	**7MB1 943-2AA81**
Replacement filter element	
Made of PTFE, fineness 2 µm	**7MB1 943-2AA14**

Dimensional drawings

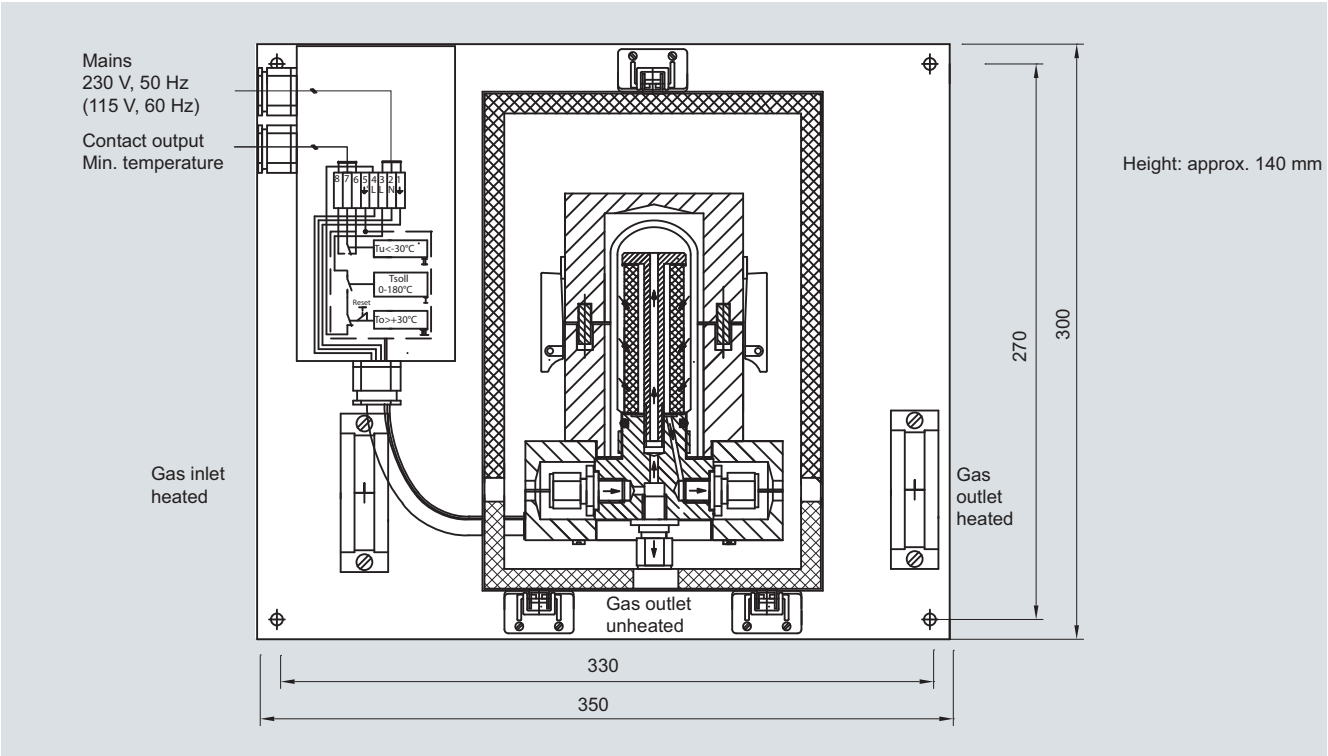

Temperature-controlled, heated sample gas filter for operating temperatures up to max. 180 °C, gas inlet on left (for FIDAMAT total hydrocarbon analyzer)

Temperature-controlled, heated sample gas filter

Max. 180 °C,
for FIDAMAT total hydrocarbon analyzer

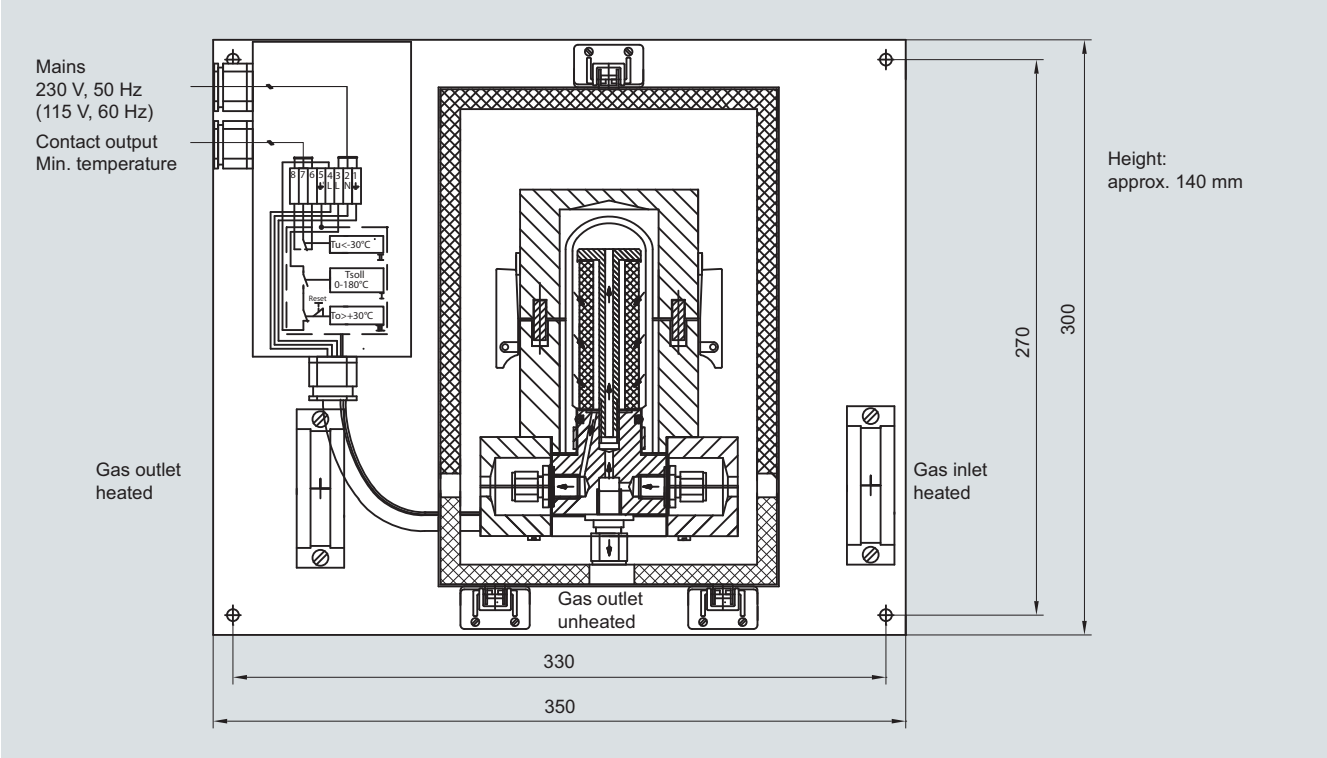

Temperature-controlled, heated sample gas filter for operating temperatures up to max. 180 °C, gas inlet on right (for FIDAMAT total hydrocarbon analyzer)

Components for sample preparation

4

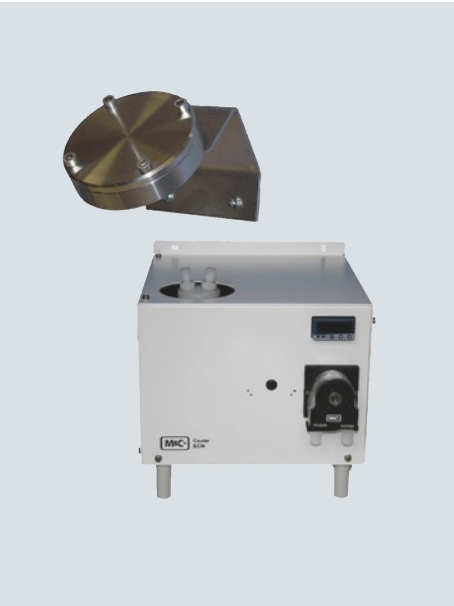

4/2 Filters
4/2 Room air filter
4/2 Front mounting filter
4/3 Coalescence filter
4/5 Particle and coalescence filter with stainless steel enclosure
4/6 Particle and coalescence filter with PVDF enclosure
4/7 Universal filter
4/9 Moisture sensor and wiring modules
4/11 Filter with stainless steel enclosure

4/13 Condensation trap
4/13 With PP enclosure
4/13 With stainless steel enclosure

4/14 Condensation removal
4/14 Condensation tank
4/15 Preliminary condensation tank
4/16 Hose pump for condensation removal

4/17 Gas coolers
4/17 Compressor gas coolers

4/24 Valves
4/24 Needle valve
4/25 Low-pressure overflow valve
4/25 Non-return valves
4/26 Shut-off ball valve for low temperatures
4/26 Shut-off ball valve for high temperatures
4/27 Multiway ball valves made of stainless steel
4/28 Control assemblies for shut-off ball valves
4/28 Shut-off and multiway ball valves made of PVDF

4/29 Solenoid valves
4/29 2/2-way solenoid valve Made of PVDF
4/30 Made of stainless steel
4/31 Made of stainless steel, explosion-proof
4/32 3/2-way solenoid valve, as mixing valve Made of PVDF
4/33 3/2-way solenoid valve, as mixing valve Made of stainless steel, for corrosive, dry gases
4/34 3/2-way solenoid valve, as mixing valve Made of stainless steel, explosion-proof
4/35 Appliance socket acc. to DIN EN 175301-803, form A, with LED and varistor

4/36 Flowmeters
4/36 All-metal flowmeter
4/37 Glass flowmeter
4/38 Isolating switch amplifier

4/39 Pressure reducers
4/39 Single-stage pressure reducer For calibration gas cylinders
4/40 Single-stage pressure reducer For installation in pipes
4/41 Two-stage pressure reducer for calibration gas cylinders
4/42 Twin cylinder station for two calibration gas cylinders

4/43 Gases
4/43 Calibration gases
4/44 Pure gases
4/45 Reference gas monitoring for OXYMAT gas analyzers

4/46 NO_2/NO converter

4/48 Fittings
4/48 Fittings made of PVDF
4/49 Fittings made of stainless steel

Filters

Room air filter

Application

The room air filter filters the ambient air and removed particles contained in the ambient air down to a grain size of approx. 20 µm.

Technical specifications

Filter element	Paper, 20 µm (non-replaceable)
Material (enclosure)	Polyamide (natural colors)
Max. permissible operating temperature	100 °C
Connection	Connecting sleeves, 6 mm diameter

Selection and ordering Data

	Order No.
Room air filter	**C79127-Z400-A1**

Dimensional drawings

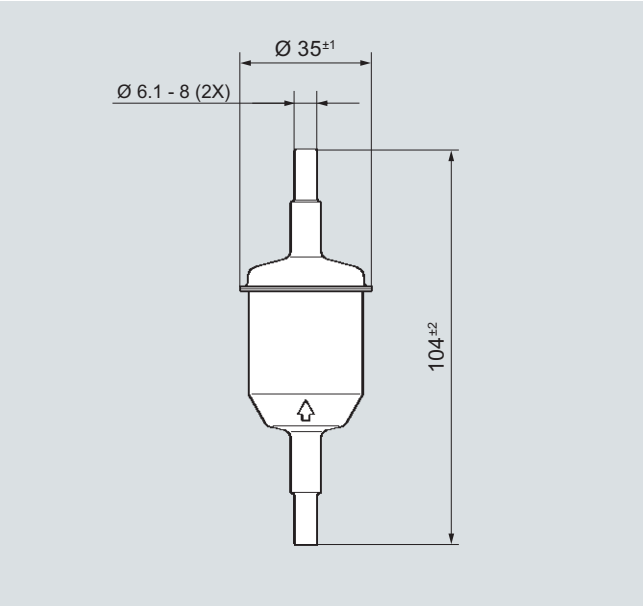

Room air filter

Front mounting filter

Application

For mounting in panels or cabinets.

Technical specifications

Filter fineness (pore size)	0.1 µm
Filter surface	50 cm²
Max. operating pressure	4 bar
Max. permissible ambient temperature	80 °C
Max. permissible sample gas temperature	80 °C
Dead volume	30 ml
Sample gas connections	G1/8
Type of mounting	Fitting in front panel
Material of parts wetted by the sample gas	PVDF, glass, Viton
Weight	280 g

Selection and ordering Data

	Order No.
Front mounting filter with glass-fiber filter element 0.1 µm	**7MB1 943-2CA30**

Consumables

	Order No.
Glass-fiber filter element 0.1 µm	**7MB1 943-2CA32**

Dimensional drawings

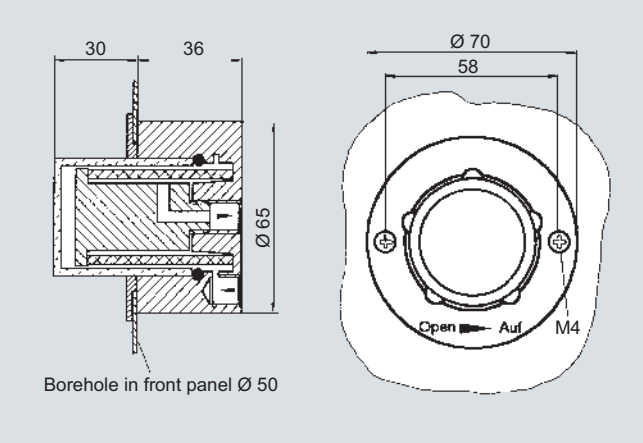

Front mounting filter

Application

For mounting in sample conditioning systems.

Design

To remove aerosols (fine drops of liquid) from the gas stream.

The collected condensation is drained in the case of pressurized systems via automatic condensation drain valves, or in the case of vacuum systems via hose pumps.

Caution!
Condensation can be corrosive. Observe the accident prevention regulations and other directives.

The coalescence filter comprises:

- Filter head (PVDF)
- Filter bubble (Duran glass)
- Gasket material (Viton)

Special features

- User-friendly and unique quick-release connection, allows extremely simple and rapid replacement of the filter element without tools
- Additional connection in filter head (G ¼") for moisture sensor or bypass
- Connection of automatic condensation drains possible

For use in hazardous areas

The filters comply with the basic safety requirements of directive 94/9/EC and are thus suitable for use in hazardous areas (Zone 1, Group IIB). Non-flammable gases and flammable gases of Group IIB or IIC (which can be occasionally explosive in normal operation, Zone1) can be passed through the filters depending on the filter element used.

The information in the associated Operating Instructions must be observed!

Technical specifications

Gas connections	Inlet and outlet, 2 x G¼ female thread diagonally opposite on side
Sample gas pressure	Max. 4 bar
Filter surface	28 cm^2
Dead volume	73 ml
Type of mounting	Wall mounting
Operating temperature	Max. 100 °C
Weight	Approx. 0.24 kg

Selection and ordering Data

	Order No.
Coalescence filter with filter element made of borosilicate fiber	**7MB1 943-2AC12**

Accessories

	Order No.
Filter element made of borosilicate fiber (1 unit)	**7MB1 943-2AC13**

4

Coalescence filter

Dimensional drawings

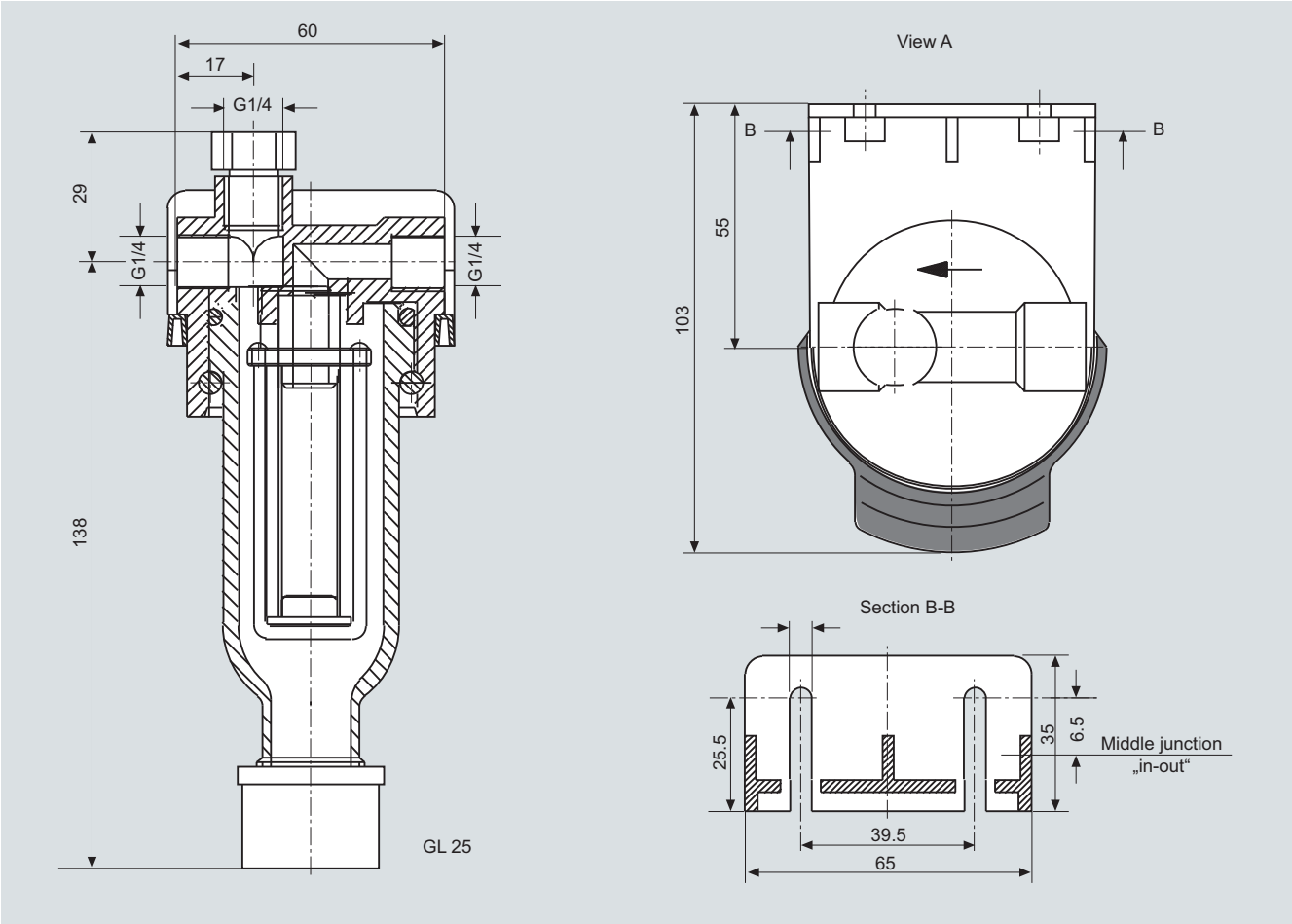

Coalescence filter

Particle and coalescence filter with stainless steel enclosure

Overview

Filter PC 1410 with stainless steel enclosure

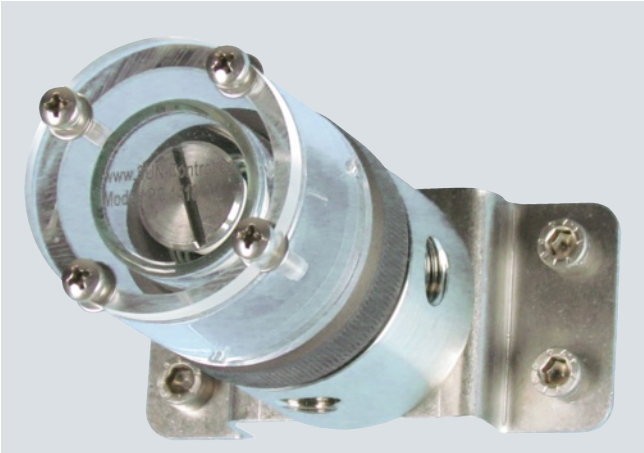

Filter PC 1410 with glass upper part and burst protection (optional)

Application

The particle or coalescence filter requires less space due to its horizontal mounting position. The replacement of the filter element is very easy from a service point of view and is performed from the front of the filter. All gas connections are housed in the filter sump. The releasing of screwed joints is not necessary. The filter enclosure can be rotated by 360°, enabling all types of gas inlet and outlet connections. The filter element is held in with a retaining screw and can therefore not fall out accidentally. It is possible to connect a bypass.

Dimensional Drawings

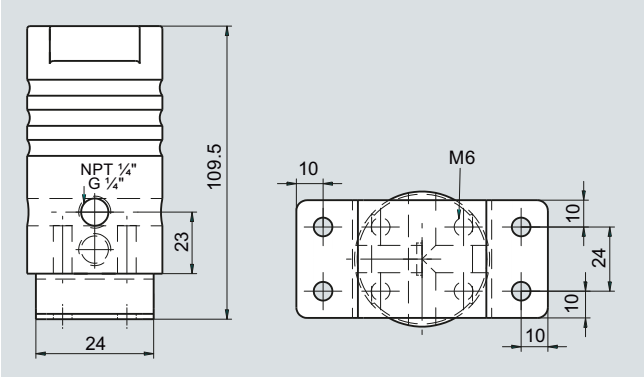

Technical specifications

Max. operating pressure	
• Stainless steel enclosure	350 bar
• Duran glass enclosure	4 bar (at 80 °C)
Max. operating temperature	-20 ... +200 °C
Used materials	• SS 1.4571, Duran glass • O-ring: (Viton)
Gas connections	4 x ¼" NPT female thread
Filter elements	Glass fiber or PTFE
Function 1	Particle filtration or
Function 2	Liquid separation (coalescence)
Mounting	Wall or front plate
Volume	Approx. 35 ml
Housing dimensions	Diameter 50 mm Length 100 mm

Selection and ordering Data

	Order No.
Particle and coalescence filter	
Filter enclosure and filter upper part made of stainless steel (1.4571) • With retaining screw for filter element • With O-ring made of FKM (Viton) • With 2x blanking plugs made of stainless steel • Without filter element, without mounting bracket	**7MB1 943-2AC53**
With filter housing made of stainless steel (1.4571) and filter upper housing made of Duran glass • With retaining screw for filter element • With O-ring made of FKM (Viton) • With 2x blanking plugs made of stainless steel • Without filter element, without mounting bracket	**7MB1 943-2AC54**

Accessories

	Order No.
Filter element for particle filtration (5 pieces) Borosilicate fiber micro glass fibers 0.1 µm	**7MB1 943-2AC55**
Filter element for coalescence application (5 pieces) Borosilicate fiber micro glass fibers 0.1 µm	**7MB1 943-2AC56**
Holding bracket, wall mounting	**7MB1 943-2AC57**
Holding bracket, front plate	**7MB1 943-2AC58**
Burst protection for glass upper part	**7MB1 943-2AC60**

Consumables/replacement materials

	Order No.
Glass upper part	**7MB1 943-2AC61**
O-ring FKM (standard)	**7MB1 943-2AC62**
O-ring PTFE	**7MB1 943-2AC63**
O-ring FFKM	**7MB1 943-2AC64**

Particle and coalescence filter with PVDF enclosure

Overview

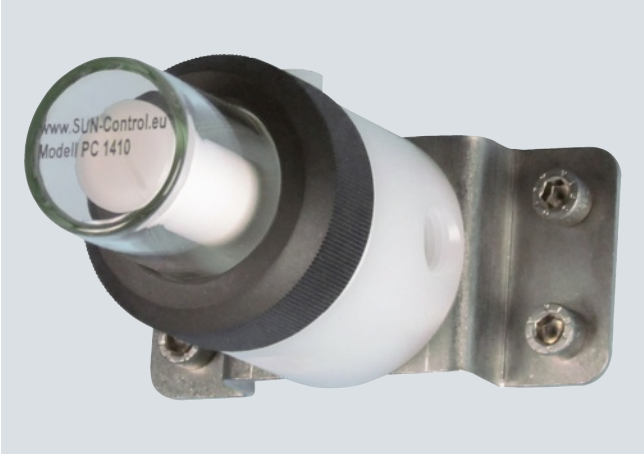

Filter PC 1410 with PVDF enclosure

Application

The particle or coalescence filter requires less space due to its horizontal mounting position. The replacement of the filter element is very easy from a service point of view and is performed from the front of the filter. All gas connections are housed in the filter sump. The releasing of screwed joints is not necessary. The filter enclosure can be rotated by 360°, enabling all types of gas inlet and outlet connections. The filter element is held in with a retaining screw and can therefore not fall out accidentally. It is possible to connect a bypass.

With a PVDF/Duran glass design, this filter type is being increasingly used in sampling preparation systems with hoses.

Technical specifications

Max. operating pressure	Max. 5 bar (25 °C)
Max. operating temperature	-5 ... +90 °C
Used materials	• PVDF, Duran glass • O-ring: (Viton)
Gas connections	4 x G-female thread
Filter elements	Glass fiber or PTFE
Function 1	Particle filtration or
Function 2	Liquid separation (coalescence)
Mounting	Wall or front plate
Volume	Approx. 35 ml
Housing dimensions	Diameter 50 mm Length 100 mm

Selection and ordering Data

	Order No.
Particle and coalescence filter With filter housing made of PVDF and filter upper part made of Duran glass • With retaining screw for filter element • With O-ring made of FKM (Viton) • With 2x blanking plugs made of PVDF • Without filter element, without mounting bracket	**7MB1 943-2AC52**

Accessories

	Order No.
Filter element for particle filtration (5 pieces) Borosilicate fiber micro glass fibers 0.1 µm	**7MB1 943-2AC55**
Filter element for coalescence application (5 pieces) Borosilicate fiber micro glass fibers 0.1 µm	**7MB1 943-2AC56**
Holding bracket, wall mounting	**7MB1 943-2AC57**
Holding bracket, front plate	**7MB1 943-2AC58**
Burst protection for glass upper part	**7MB1 943-2AC60**

Consumables/replacement materials

	Order No.
Glass upper part	**7MB1 943-2AC61**
O-ring FKM (standard)	**7MB1 943-2AC62**
O-ring PTFE	**7MB1 943-2AC63**
O-ring FFKM	**7MB1 943-2AC64**

Application

For mounting in sample conditioning systems.

Design

The universal filter with quick-release fastener has a filter mesh of 2 µm. The quick-release fastener means that the PTFE or glass-fiber filter insert can be easily changed. Dry dusts are filtered out reliably, and a moisture sensor can be installed on request. The filter insert can be easy checked through the transparent housing.

Special features

- User-friendly and unique quick-release connection, allows extremely simple and rapid replacement of the filter element without tools
- Low dead volume
- Additional connection in filter head (G ¼") for moisture sensor, bypass or vent

For use in hazardous areas

The filters comply with the basic safety requirements of directive 94/9/EC and are thus suitable for use in hazardous areas (Zone 1, Group IIB). Non-flammable gases and flammable gases of Group IIB or IIC (which can be occasionally explosive in normal operation, Zone1) can be passed through the filters depending on the filter element used.

The information in the associated Operating Instructions must be observed!

Technical specifications

Gas connections	Inlet and outlet, 2 x G¼ female thread diagonally opposite on side
Sample gas pressure	Max. 4 bar
Filter surface	
• Glass fiber	80 cm^2
• Teflon (PTFE)	60 cm^2
Dead volume	57 ml
Type of mounting	Wall mounting
Operating temperature	Max. 100 °C
Materials	
• Filter head	PVDF
• Enclosure	Duran glass
• Gasket	Viton
Weight	Approx. 0.30 kg

Selection and ordering Data

	Order No.
Universal filter	
For filter insert made of glass fibers, pore size 2 µm	**7MB1 943-2AC00**
For filter insert made of Teflon, pore size 2 µm	**7MB1 943-2AC01**

Accessories and consumables

	Order No.
Filter inserts (per 5 units)	
Made of glass fiber, pore size 2 µm, matching 7MB1 943-2AC00	**7MB1 943-2AC10**
Made of Teflon, pore size 2 µm, matching 7MB1 943-2AC01 (filter insert cannot be combined)	**7MB1 943-2AC11**

Universal filter

Dimensional drawings

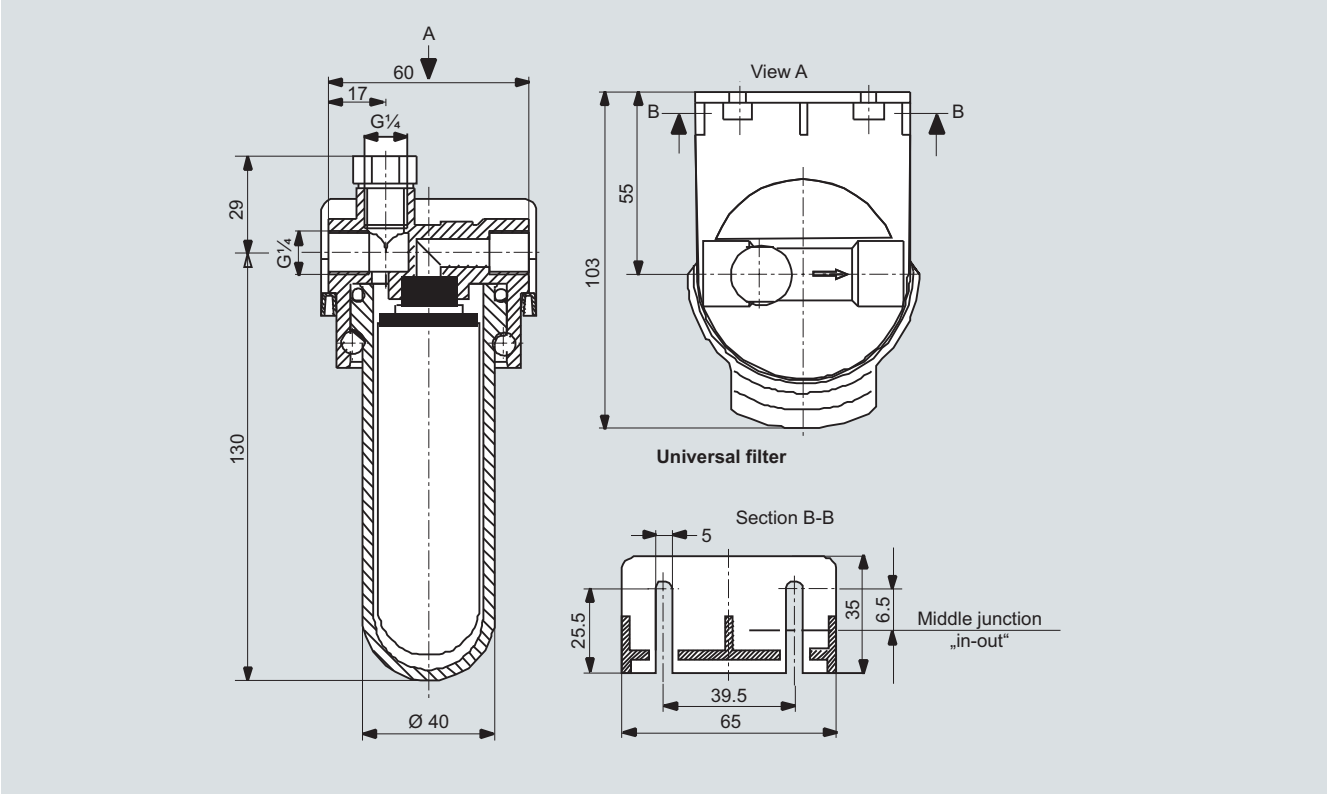

Universal filter

Application

The moisture sensor is used to signal the penetration of moisture in sample gas treatment systems in order to prevent the damaging of measuring cells by condensation. It is fitted in the gas stream and already responds to low quantities of moisture; it therefore is not dependent on an accumulation of condensation. Once the fault has been eliminated, the moisture sensor is immediately dried by the flow of gas. It is maintenance-free.

The moisture sensor is connected to a wiring module with which the sample gas pump can be switched off and an alarm signal triggered. Once the sample gas has passed the moisture sensor, it first flows through the filter housing before reaching the analyzer. This buffer provides an additional safety period for a response by the wiring module if the sensor detects moisture. There are three different wiring modules for selection depending on the conditions of use.

Design

The moisture sensor can be used together with the universal filter, the coalescence filter, or with flow adapters. Together with the wiring module, the moisture sensor has an open-circuit monitoring function.

For use in hazardous areas

The moisture sensor can only be used in the ATEX area together with the associated wiring module with intrinsically-safe output (II 2G EEx ib IIC T5). The wiring module itself must be installed in a non-hazardous environment.

Technical specifications

Max. permissible operating temperature	50 °C	
Max. permissible operating pressure	2 bar; other version for higher pressure on request	
Cable length (moisture sensor)	4 m	
Materials	PVDF, stainless steel mat. no. 1.4571, epoxy resin	
Weight	Approx. 0.1 kg	
Wiring modules	• With intrinsically-safe output for applications according to ATEX • Rail mounting	• Non-Ex applications in accordance with IEC General Purpose • Rail mounting
Power supply	230 V AC or 115 V AC 48 … 62 Hz	24 V DC ± 10 %
Ex protection class	II(1)G [EEx ia] IIC	-
Ex certificate	TÜV 00 ATEX 1604	-
Max. cable length	70 m	4 m
Degree of protection acc. to EN 60529		
• Device	IP40	IP40
• Terminal strip	IP20	IP20
Operating temperature	-25 ... +60 °C	-20 ... +60 °C
Type of mounting	DIN rail 35 mm	DIN rail 35 mm
Dimensions (H x W x D) in mm	99 x 22.5 x 120	75 x 70 x 109
Weight	Approx. 0.2 kg	Approx. 0.2 kg

Selection and ordering Data

	Order No.
Moisture sensor Cable length 4 m, connection G¼	**7MB1 943-2AC51**
Wiring modules	
With intrinsically-safe output for applications according to ATEX	
• For 1 moisture sensor, power supply 230 V AC, 48 … 62 Hz	**7MB1 943-2AC40**
• For 1 moisture sensor, power supply 115 V AC, 48 … 62 Hz	**7MB1 943-2AC41**
For use in accordance with IEC General Purpose	
• For max. 2 moisture sensors, power supply 24 V DC	**7MB1 943-2AC42**
Flow adapter	
Made of PVDF, for moisture sensor for installation in sample gas line	**7MB1 943-2AC06**
Made of stainless steel mat. no. 1.4571, for installation in piping	**7MB1 943-2AC43**

Moisture sensor and wiring modules

Dimensional drawings

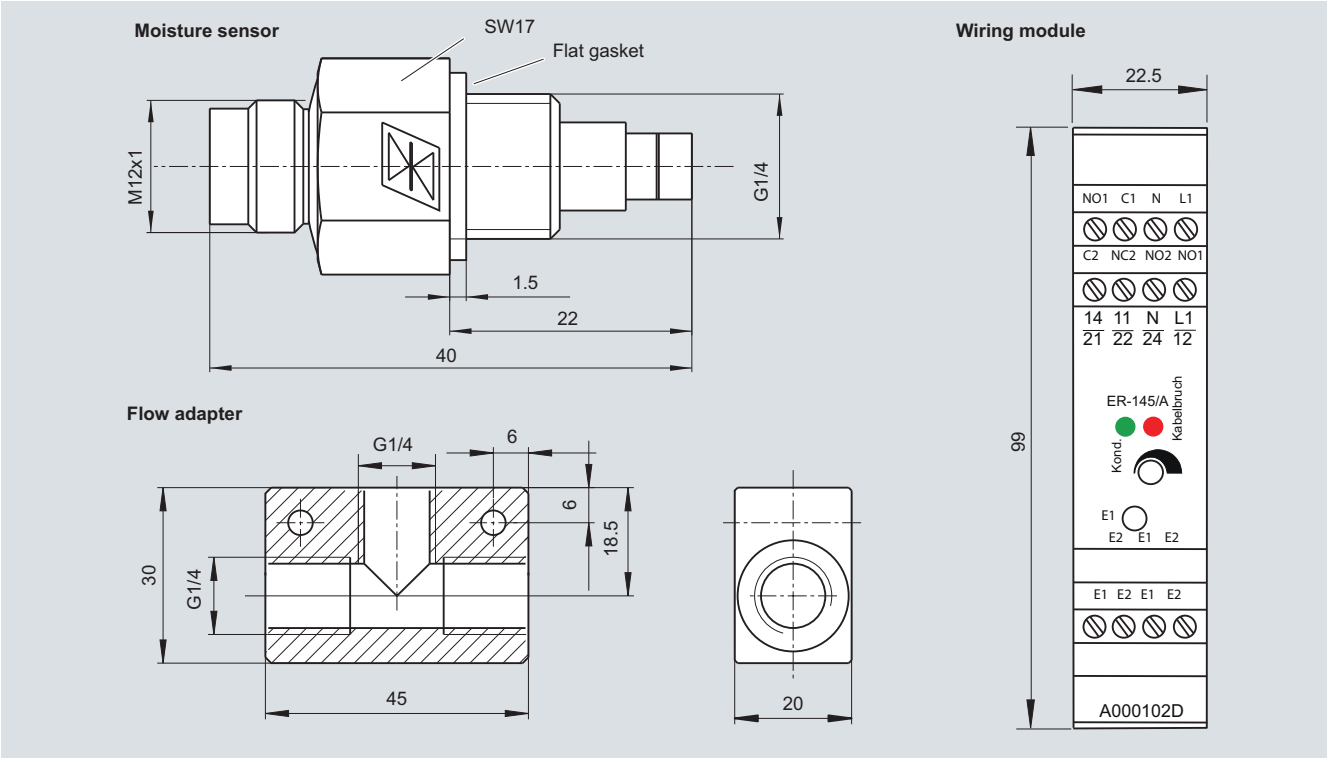

Moisture sensor, wiring module with intrinsically-safe output for applications according to ATEX, and flow adapter

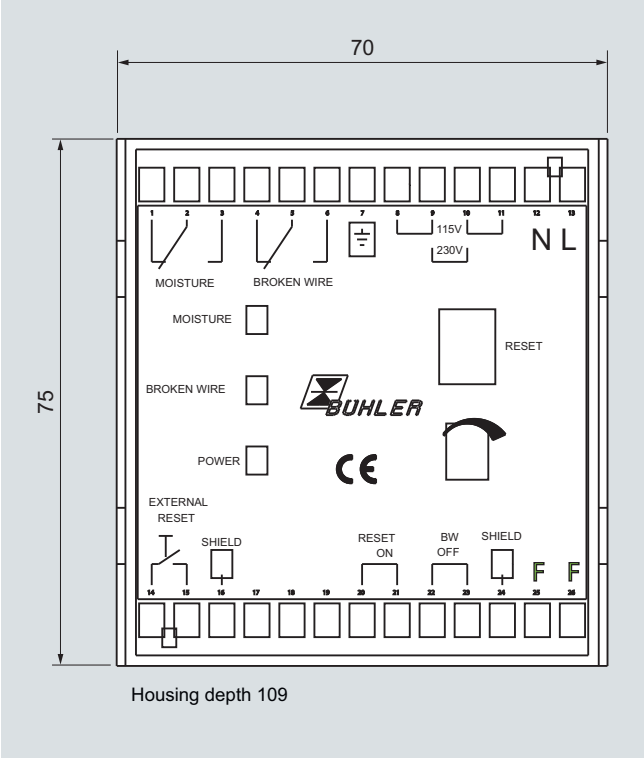

Wiring module for non-hazardous applications

Filter with stainless steel enclosure

Application

For filtering gases under process conditions.

Design

Inlet and outlet identification for use as dust filter (gas path from outside to inside).

Special features

- Extremely simple and rapid replacement of filter element without tools
- Low dead volume
- Possibility for (automatic) draining of condensation through connection thread (NPT ¼") in the filter bubble
  Caution! Condensation can be corrosive. Observe the accident prevention regulations and other directives.

The warning information in the associated Operating Instructions must be observed!

Technical specifications

Max. permissible operating pressure	350 bar (at max. 150 °C operating temperature)
Max. permissible operating temperature	150 °C
Dead volume with filter element	18 ml
Connection thread (inlet, outlet, drain)	Female thread ¼ NPT
Materials	
• Body	Steel SS 316 L, mat. no. 1.4404
• Gasket	Viton, FEP sheath
Weight	Approx. 0.8 kg
Filter elements	
Material	Glass fiber / epoxy resin
Max. permissible temperature	150 °C
Filter fineness (pore size)	2 / 5 / 10 µm

Selection and ordering Data

	Order No.
Stainless steel enclosure (empty)	**7MB1 943-2AC44**
Mounting bracket	**7MB1 943-2AC45**
Plug NPT 1/4	**7MB1 943-2AC46**
Filter elements	
Filter fineness 2 µm	**7MB1 943-2AC47**
Filter fineness 5 µm	**7MB1 943-2AC48**

Filter with stainless steel enclosure

Dimensional drawings

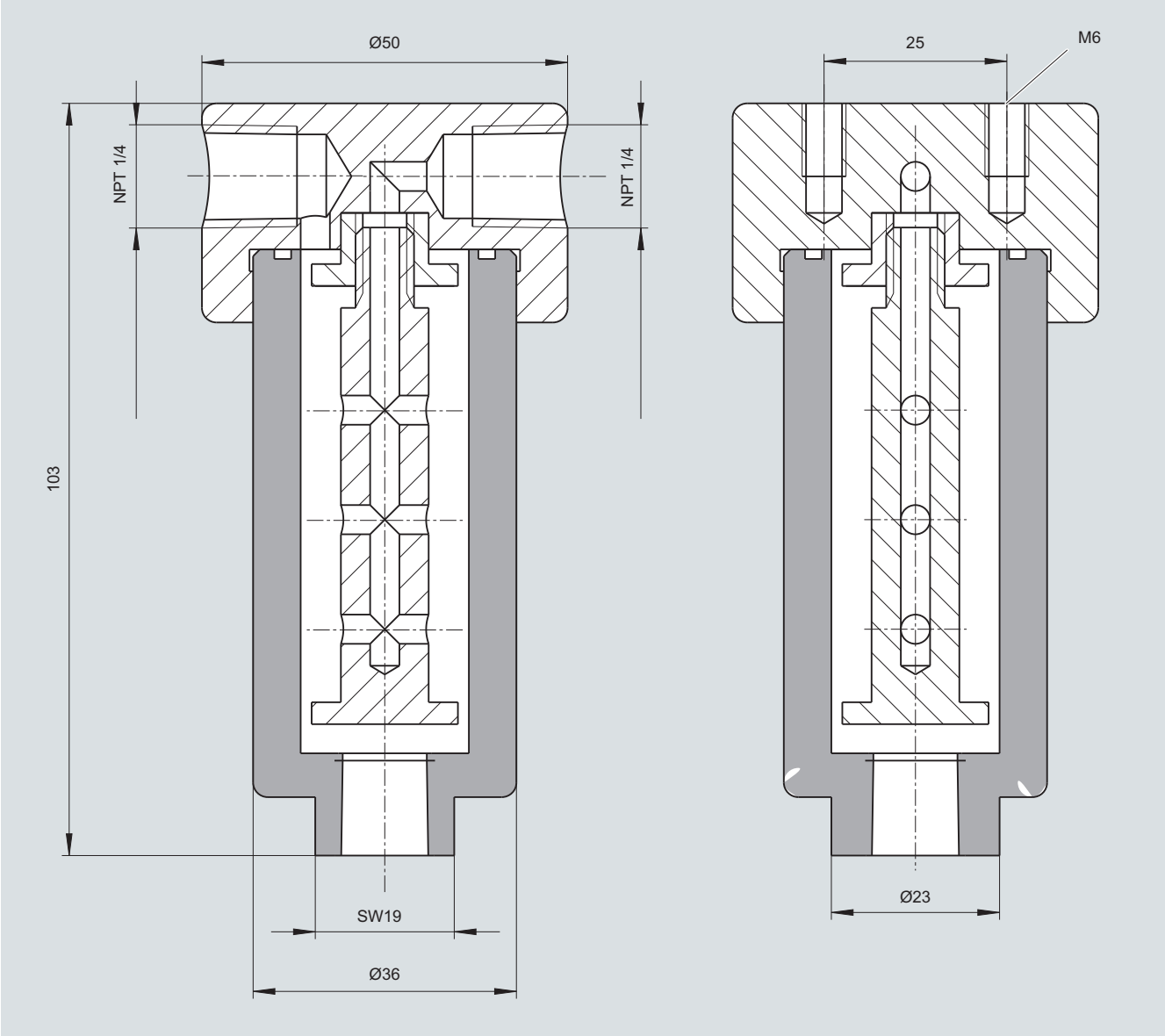

Filter with stainless steel enclosure

With PP enclosure

Overview

Condensation trap WT 20.5 with PP enclosure

Application

The condensation trap is positioned in the hose directly upstream of the gas analyzer. If the assigned gas preparation system fails (cooler, hose pump, dust filter or similar), the semipermeable diaphragm protects the gas analyzer from condensation and dust

Technical specifications

Max. operating pressure of gas	2 bar
Max. condensation pressure	2 bar
Max. recommended gas flow	400 l/h
Pressure drop with 100 l air/h	10 mbar
Pore size of diaphragm	< 0.1 µm
Max. operating temperature	0 / +90 °C
Used materials	PP, PTFE
Gas connections	1/8" NPT male thread

Selection and ordering Data

	Order No.
Condensation trap 1/8" NPT male thread	**7MB1 943-2AC32**

Accessories

	Order No.
2 units Connection adapter (PP) 1/8" NPT threaded connection to hose connection 6/4 mm	**7MB1 943-2AC34**

4

With stainless steel enclosure

Overview

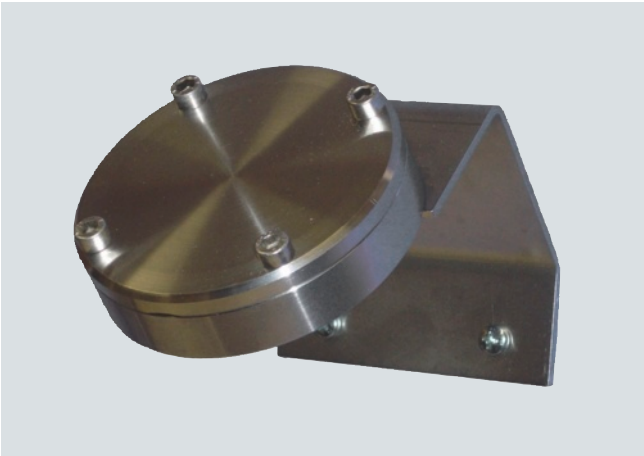

Condensation trap WT 20.82 with stainless steel enclosure and oil-repellent membrane

Application

The condensation trap with stainless steel enclosure and oil-repellent membrane is used to protect the analyzer from condensation and dust, and is particularly used together with piped gas preparation systems. The bypass filter option is integrated and can be activated where required, thus diverting condensation carried in the stream via the bypass.

Technical specifications

Max. operating pressure of gas	50 bar
Maximum condensation pressure of water	2 bar
Maximum condensation pressure of oil	0.5 bar
Max. recommended gas flow	300 l/h
Pressure drop with 100 l air/h	Approx. 25 mbar
Pore size of diaphragm	< 0.1 µm
Max. operating temperature	-20 / +190 °C
Used materials	SS 1.4571, mat. no. 1.4401 O-rings: (Viton)
Gas connections (inlet and bypass)	1/4" NPT female thread
Gas connection (outlet)	1/8" NPT female thread
Scope of delivery	Housing complete with diaphragm, support sieve, and mounting bracket

Selection and ordering Data

	Order No.
Condensation trap WT 20.82 (Viton)	**7MB1 943-2AC35**

Consumables

	Order No.
Replacement diaphragm	**7MB1 943-2AC36**
Set of O-rings (Viton)	**7MB1 943-2AC37**
Set of O-rings (PTFE)	**7MB1 943-2AC38**

Condensation tank

Application

Condensation tank for use with analyzer systems, for installation in analyzer cabinets or sheds.

Technical specifications

Tank material	Polyethylene
Capacity	19 l
Weight of condensation tank (without BERO sensor)	1.05 kg
Weight of BERO sensor	0.23 kg
Quick-release connections for condensation inlet and venting	For PTFE hose 4/6
Power supply for BERO sensor	24 V DC

Selection and ordering Data

	Order No.
Condensation tank Completely assembled, but without Bero sensor	**7MB1 943-2AA65**
Liquid limit monitor (BERO) Power supply 24 V DC	**7MB1 943-2AA66**

Dimensional drawings

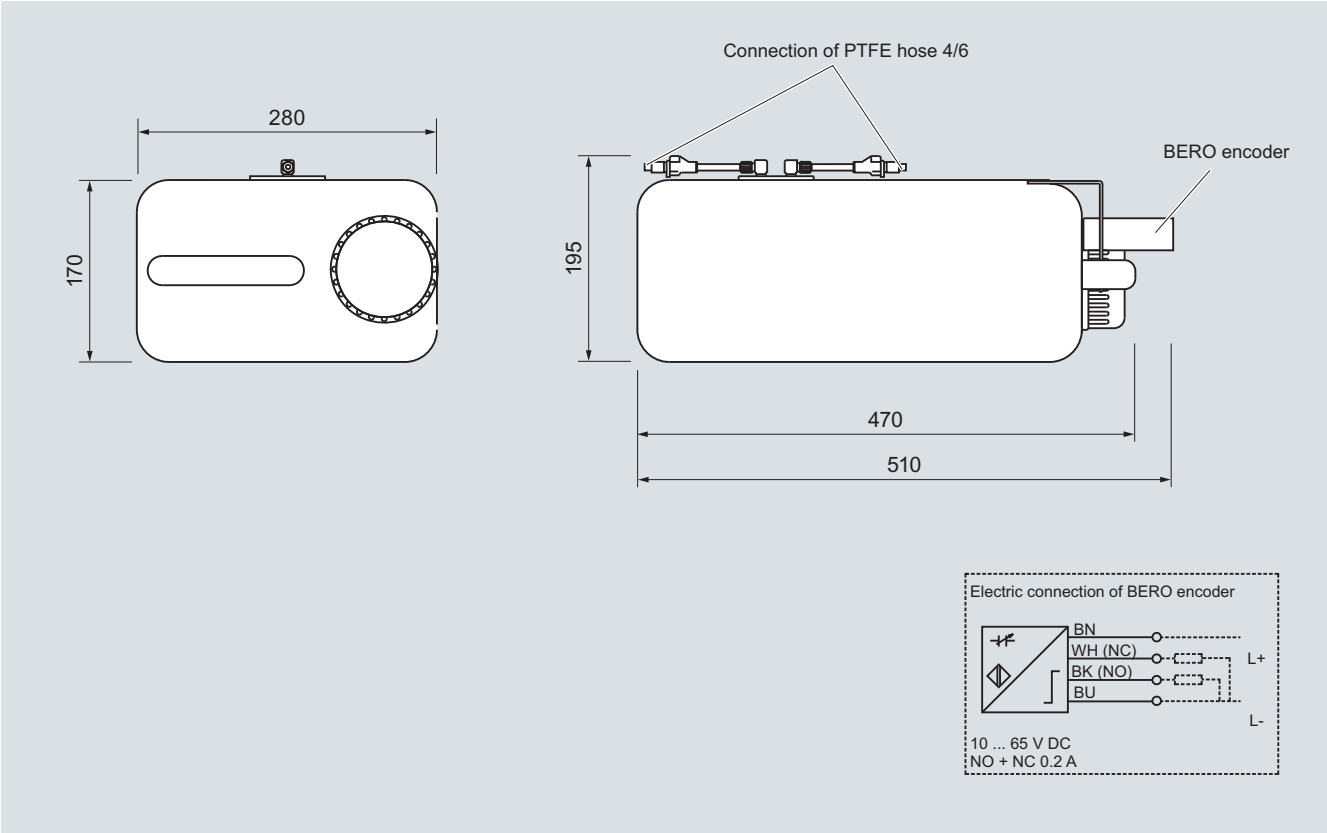

Condensation tank with liquid limit monitor

More information

The liquid limit monitor (BERO sensor) must be ordered separately and fitted by the customer into the fixing bracket on the condensation tank.

See the connection diagram for the electrical connection of the BERO sensor.

Application

For use where condensation is very high.
Fitted upstream of the gas cooler.

Selection and ordering Data

	Order No.
Preliminary condensation tank Completely made of glass, with mounting clamp, cap for couplings and gaskets for hose 4/6	**7MB1 943-2AA50**

Accessories and consumables

	Order No.
Mounting clamp Holder for preliminary condensation trap	**7MB1 943-2AA48**
Condensation trap Made of glass	**7MB1 943-2AA41**
Cap For couplings (3 x required)	**7MB1 943-2AA44**
Gasket [1]	
For hose 4/6	**7MB1 943-2AA45**
For hose 6/8	**7MB1 943-2AA46**
For hose 8/10	**7MB1 943-2AA47**

[1] The number of gaskets required for the gas inlet/outlet and the condensation outlet depends on the hose diameter.

Dimensional drawings

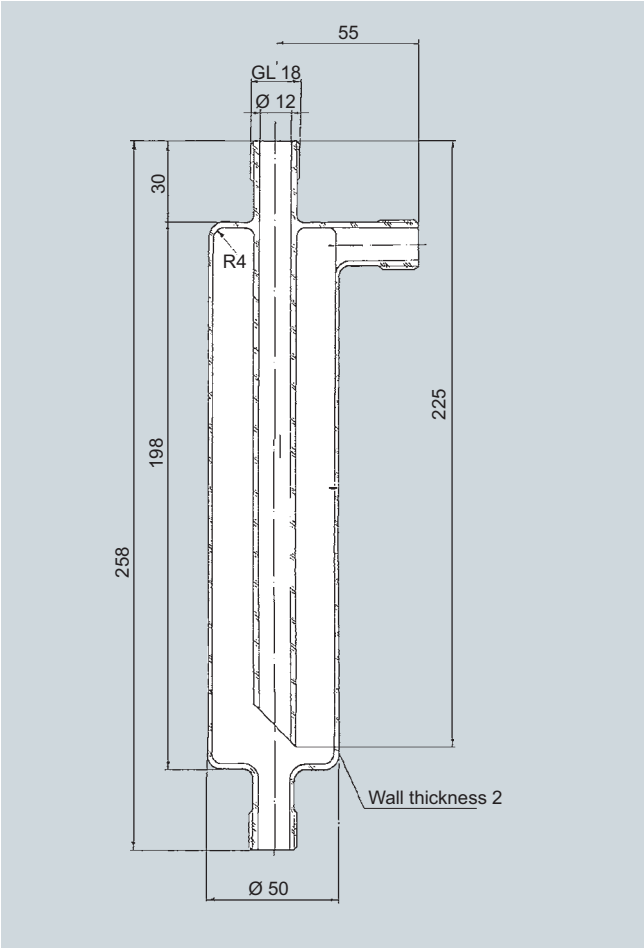

Preliminary condensation trap

Hose pump for condensation removal

Application

For the continuous removal of condensation.

Technical specifications

Pump capacity	Approx. 0.3 l/h
Materials	
• Hose	Novopren
• Hose couplings	PVDF
Electrical connections	Terminals
Max. permissible ambient temperature	40 °C
Final pressure	0.8 bar
Explosion protection	–
Power supply	115/230 V AC, 50/60 Hz, switchable
Weight	Approx. 0.5 kg

Selection and ordering Data

	Order No.
Hose pump	**7MB1 943-3AA20**

Consumables and accessories

	Order No.
Hose	**7MB1 943-3AA22**
Elbow coupling For Teflon hose 4 x 1 mm	See on “Fittings/Fittings made of PVDF”

Dimensional drawings

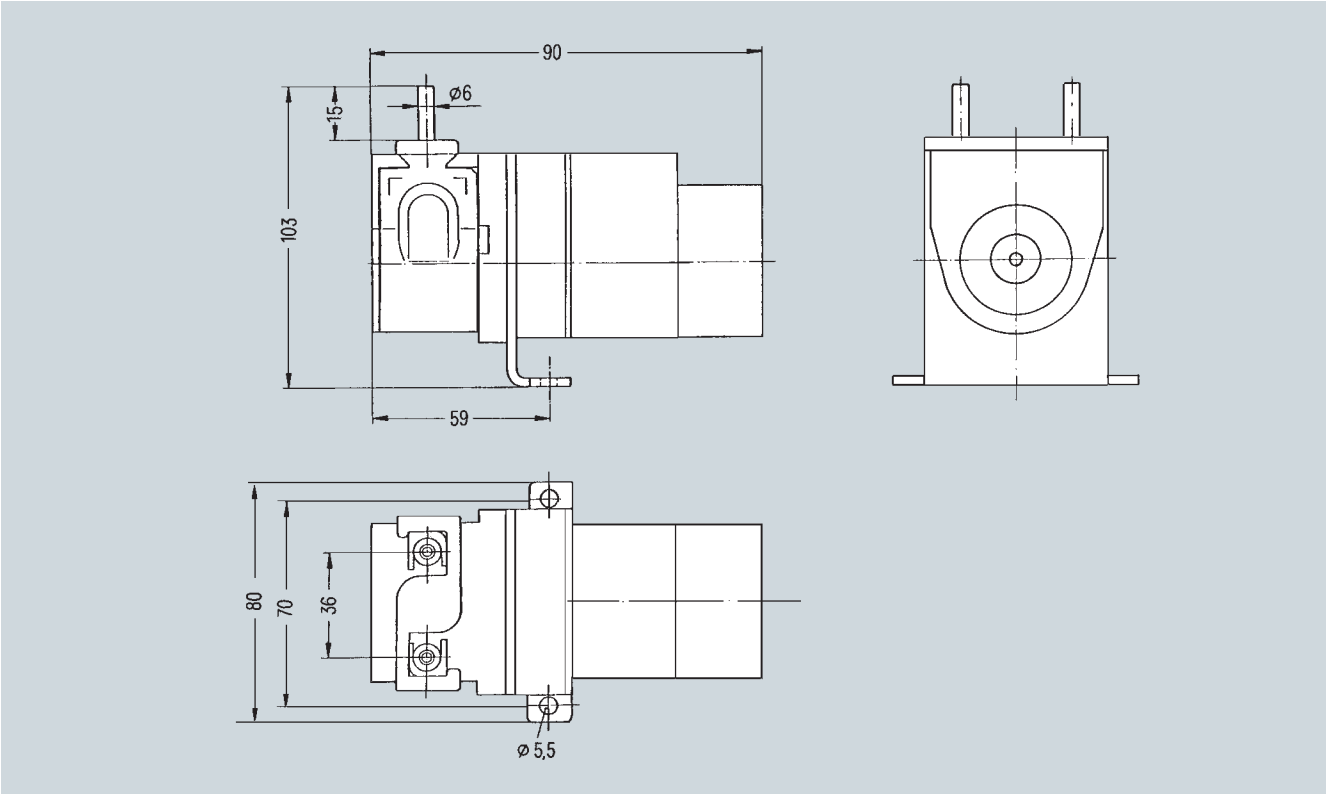

Hose pump

Overview

Application

Reduction of the dew point of moist sample gases in order to bring the sample gas to a stable, low dew point. The gas cooler prevents condensation of the sample gas in the subsequent sample preparation system and in the analyzer. As a result of the constant, low dew point, the use of gas coolers also largely reduces water vapor cross-sensitivity (e.g. with NDIR devices) and volume errors.

The non-explosion-proof compressor gas coolers are available with 1, 2 or 4 cooling circuits/heat exchangers (for 1 to 4 sample gas streams). The explosion-proof compressor gas coolers can be fitted with 1 or 2 cooling circuits/heat exchangers.

With the non-explosion-proof compressor gas coolers, the condensation produced in the respective heat exchanger is disposed of using hose pumps. The hose pumps guarantee that the system is sealed off from the atmosphere. This prevents the sucking-in of "incorrect air" or the discharge of sample gas in the case of an overpressure.

With the explosion-proof gas coolers, the condensation must be disposed of externally (e.g. via automatic condensation traps or explosion-proof hose pumps).

Some versions of the non-explosion-proof gas coolers (type CSS-V) are also equipped with a fine filter with moisture sensor and evaluation electronics in addition to the hose pumps.

The status alarm is triggered if there is an inrush of liquid.

Compressor gas coolers

Design

Flow diagram of the non-explosion-proof compressor gas coolers

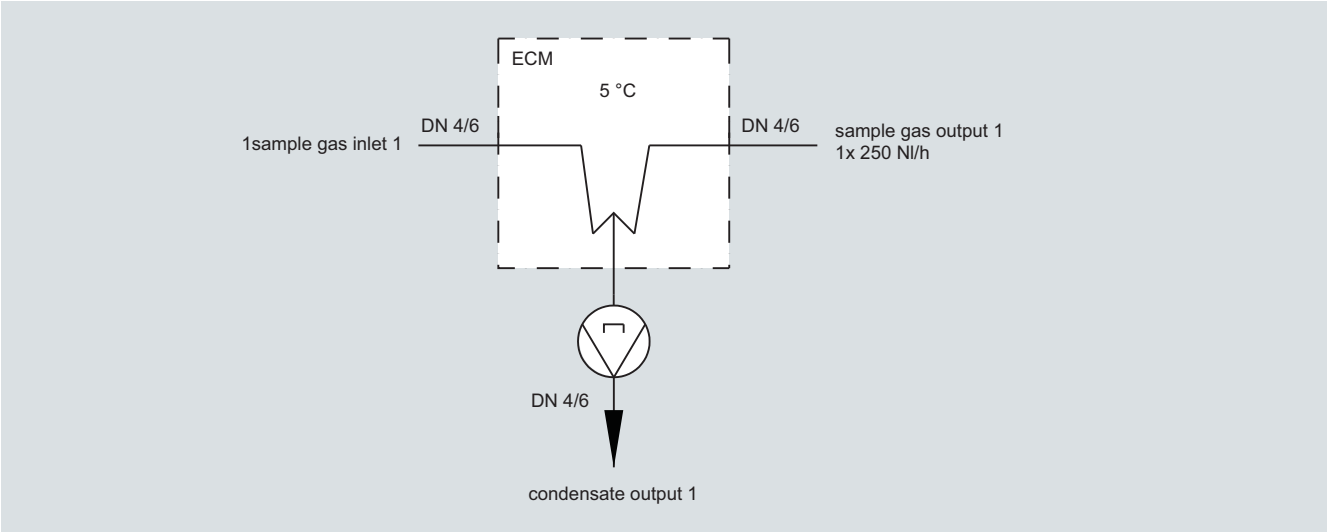

Design with 1 gas path

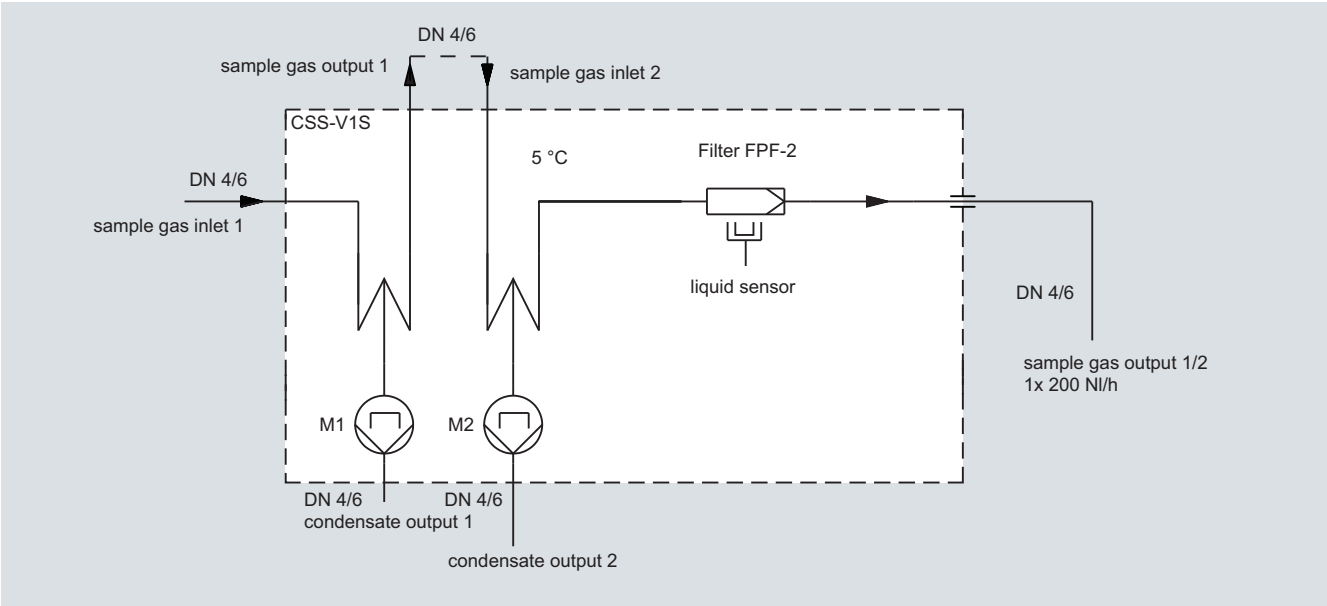

Design with 2 gas paths; version 1

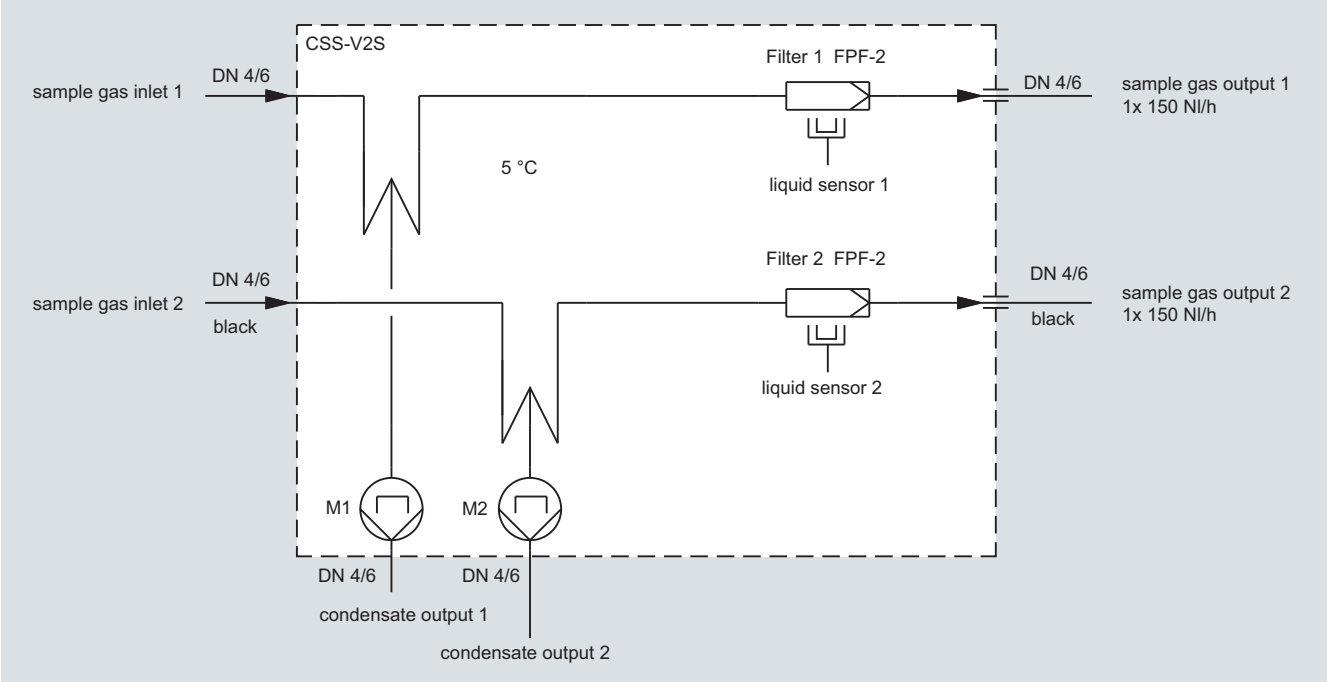

Design with 2 gas paths; version 2

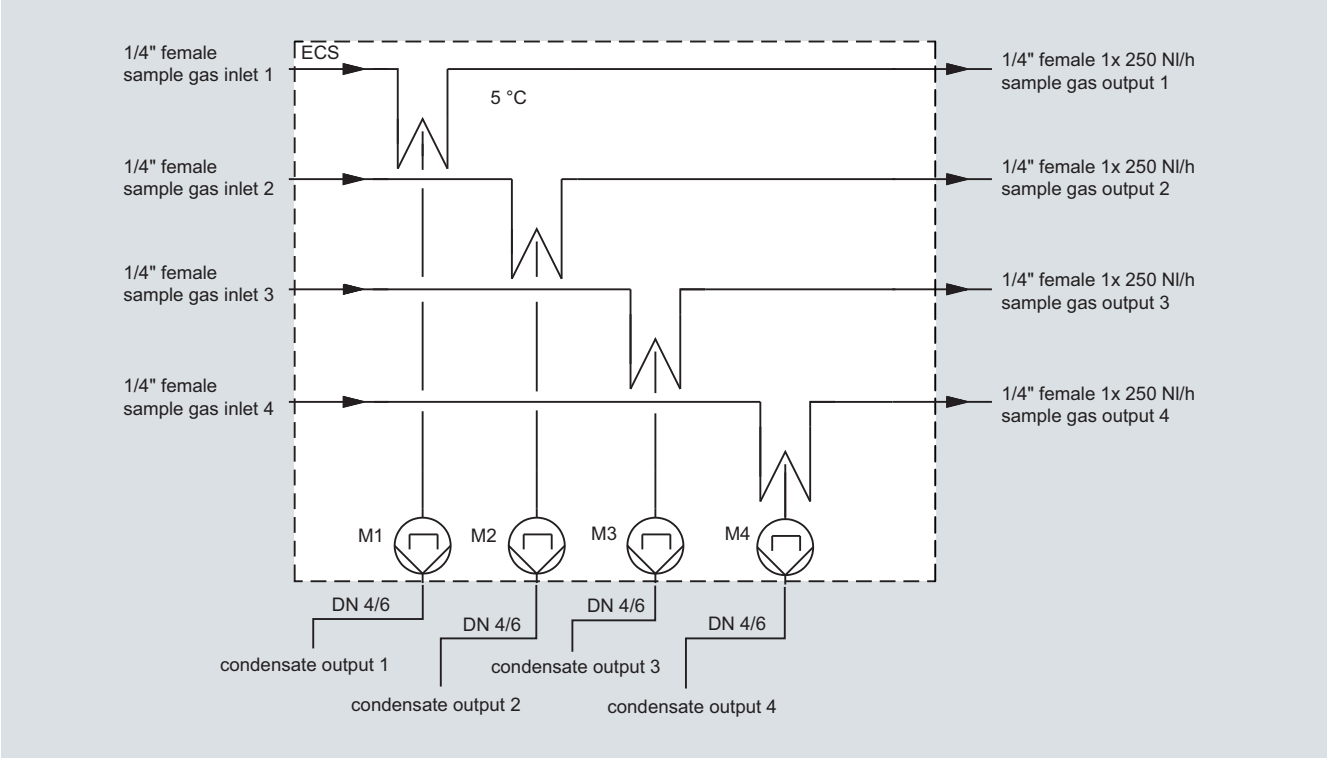

Design with 4 gas paths

Technical specifications

Non-Ex-protected compressor gas coolers

Type	Quantity	ECM	CSS-V1S CSS-V2S	ECS
Gas paths / heat exchangers (HE) Material PVDF	Units	1	2	4
Integrated hose pump (SR25.2)	Units	1	2	4
Integrated fine filter with moisture sensor	Units	0	1 or 2	0
Gas flow	l/h	Max. 250[1)]	max. 2 x 150[1)]	Max. 4 x 250[1)]
Gas inlet temperature	°C	Max. 180[1)]	Max. 105[1)]	Max. 180[1)]
Gas inlet dew point	°C	Max. 80[1)]		
Gas outlet dew point	°C	Factory setting +5; range of adjustment +2 … 7		
Ambient temperature	°C	10 … 50	10 … 40	5 … 45
Gas pressure	bar a	Max. 2	0.7 ... 1.4	Max. 2
Dead volume/HE	ml	100	25	70
Wetted parts material		PVDF, Novopren	PVDF, Novopren, PVC, FPM, PPH, PTFE	PVDF, Novopren
Operational readiness	min	<15	10	< 30
Power consumption	VA		Max. 220	Max. 280
Power supply connection		230 V AC; 50 Hz 115 V AC; 60 Hz	230 V AC; 50 Hz Optional 115 V AC; 50 … 60 Hz	230 V AC; 50 Hz 115 V AC; 60 Hz
Electric connection		Terminals 2.5 mm²	Appliance plug with 2 m cable	Terminals 2.5 mm²
Status alarm (max. 250 V 2 A AC/DC 500 VA, 50 W)		2 changeover contacts (isolated)	CSS-V1S: 1 changeover contact as common alarm CSS-V2S: 2 changeover contacts as common alarm	2 changeover contacts (isolated)
Degree of protection for enclosure		IP 20 (EN 60529)		
Enclosure design/type of mounting		Wall mounting	19" rack mounting or wall mounting	
Enclosure dimensions (W x H x D)	mm	270 x 270 x 316	483 x 268 x 348	483 x 360 x 406
Weight	kg	Approx. 14	Approx. 23	Approx. 34
Gas/condensation connections		For PTFE hose 4/6		
Housing color	RAL	9003	7035	9003

[1)] Technical data with maximum values must be evaluated with consideration of the total cooling capacity at 25 °C and an outlet dew point of 5 °C.

Version 1: **Type CSS-V1S**	**Heat exchangers in series:** HE 1 for preliminary condensation; HE 2 for constant dew point temperature of sample and calibration gases. Calibration gas valves and sample gas pump can be fitted between the the outlet HE1 and the inlet HE2. A fine filter accessible from the front is fitted downstream of HE2. To protect subsequent analyzers from an inrush of liquid, a liquid alarm sensor is integrated in the filter.
Version 2: **Type CSS-V2S**	**Heat exchangers in parallel:** 2 separate heat exchangers arranged in parallel, each with a downstream filter and liquid alarm sensor; e.g. for measuring two different sample gases in one analyzer cabinet.

Ex-protected compressor gas coolers

Type	Quantity	EC-Ex 1SS	EC-Ex 2SS
Gas ducts / heat exchangers (HE) Material stainless steel; mat. no. 1.4571	Units	1	2
Gas flow	l/h	Max. 250[1)]	Max. 2 x 250[1)]
Gas inlet temperature	°C	Max. 180[1)]	
Gas inlet dew point	°C	Max. 80[1)]	
Gas outlet dew point	°C	Factory setting +5; range of adjustment 2 … 7	
Ambient temperature	°C	5 … 45	
Gas pressure	bar a	Max. 11	
Dead volume/HE	ml	70	
Wetted parts material		Stainless steel	
Operational readiness	min	<30	
Power consumption	VA	Approx. 280	
Power supply connection		230 V AC; 50 Hz; ± 10 % Optional 115 V AC; 50 … 60 Hz; ± 10 %	
Electric connection		Terminals 2.5 mm^2	
Status alarm (max. 230 V 2 A AC/DC 100 VA, 50 W)		1 changeover contact	
Degree of protection		IP 20 (EN 60529)	
Ex approval (ATEX)		II 2G EEx pedq [ib] IIC T4	
Enclosure design/type of mounting		19" rack mounting or wall mounting	
Enclosure dimensions (W x H x D)	mm	483 x 360 x 450	
Weight	kg	Approx. 40	
Gas connections		G1/4 inch (female) Optionally available with NPT 1/4 inch	
Condensation connections		G3/8 inch (female) Optionally available with NPT 3/8 inch	
Housing color	RAL	9003	

[1)] Technical data with maximum values must be evaluated with consideration of the total cooling capacity at 25 °C and an outlet dew point of 5 °C.

Compressor gas coolers

Selection and ordering Data

Non-Ex-protected compressor gas coolers

	Units	Order No.		Typ
Compressor gas cooler				ECM
1 gas path				
• Heat exchanger / hose pump	1			
• Fine filter with moisture sensor	0			
- Power supply 230 V AC, 50 Hz		**7MB1 943-3BB45**		
- Power supply 115 V AC, 60 Hz		**7MB1 943-3BB46**		
2 gas paths, version 1, series connection				CSS-V1S
• Heat exchanger / hose pump	2			
• Fine filter with moisture sensor	1			
- Power supply 230 V AC, 50 Hz		**7MB1 943-3BB47**		
- Power supply 115 V AC, 50 … 60 Hz		**7MB1 943-3BB48**		
2 gas paths, version 2, parallel connection				CSS-V2S
• Heat exchanger / hose pump	2			
• Fine filter with moisture sensor	2			
- Power supply 230 V AC, 50 Hz		**7MB1 943-3BB60**		
- Power supply 115 V AC, 50 … 60 Hz		**7MB1 943-3BB50**		
4 gas paths				ECS
• Heat exchanger / hose pump	4			
• Fine filter with moisture sensor	0			
- Power supply 230 V AC, 50 Hz		**7MB1 943-3BB53**		
- Power supply 115 V AC, 60 Hz		**7MB1 943-3BB54**		

Accessories for non-Ex-protected compressor gas coolers

	Order No.
Hose pump, complete (SR25.2)	**7MB1 943-3AA26**
Spare hose with connection glands	**7MB1 943-3AA27**
Hose reel stand, complete	**7MB1 943-3AA28**
Spare filter, glass fiber, 0.3 µm (25 units/pack)	**7MB1 943-3AC40**
O-ring for filter, FPF-2/54, Viton	**7MB1 943-3AC41**

Ex-protected compressor gas coolers

	Units	Order No.		Typ
Compressor gas cooler with				EC-EX 1SS
1 gas path				
• Stainless steel heat exchanger	1			
- Power supply 230 V AC, 50 Hz		**7MB1 943-3BB55**		
- Power supply 115 V AC, 50 … 60 Hz		**7MB1 943-3BB56**		
2 gas paths				EC-EX 2SS
• Stainless steel heat exchanger	2			
- Power supply 230 V AC, 50 Hz		**7MB1 943-3BB57**		
- Power supply 115 V AC, 50 … 60 Hz		**7MB1 943-3BB58**		

Versions with 3 or 4 gas paths on request

Needle valve

Application

Needle valves are used to set the gas flow to the required value. They should not be used as shut-off valves.

Technical specifications

	Needle valve made of VA stainless steel	Needle valve made of PVDF
Nominal diameter	4 mm	4 mm
Permissible operating overpressure	345 bar at 40 °C	• 10 bar at 20 °C • 4 bar at 80 °C
Max. permissible sample temperature	230 °C	120 °C
Max. permissible ambient temperature	100 °C	120 °C
Material	Stainless steel	PVDF
Gas connection	Threaded joint for pipe 4/6	Threaded joint for hose 4/6
Weight	Approx. 0.3 kg	Approx. 0.1 kg

Selection and ordering Data

	Order No.
Needle valve made of PVDF	**7MB1 943-2BA13**
Needle valve made of stainless steel	**7MB1 940-1FA00**

Dimensional drawings

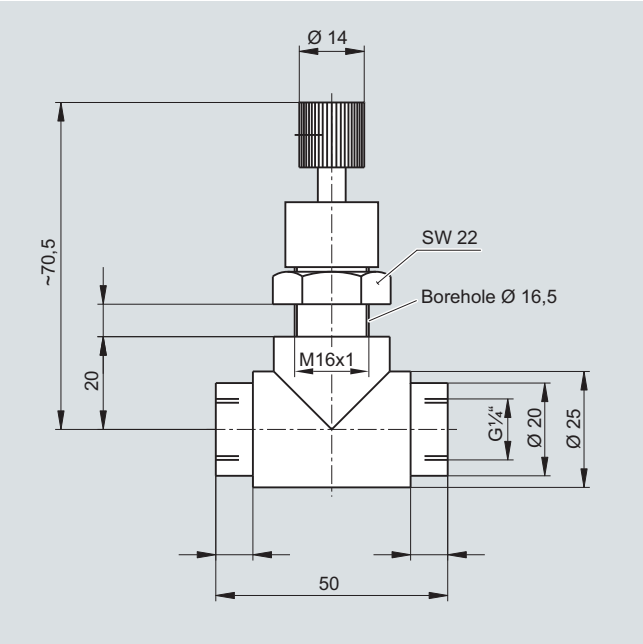

Needle valve made of PVDF

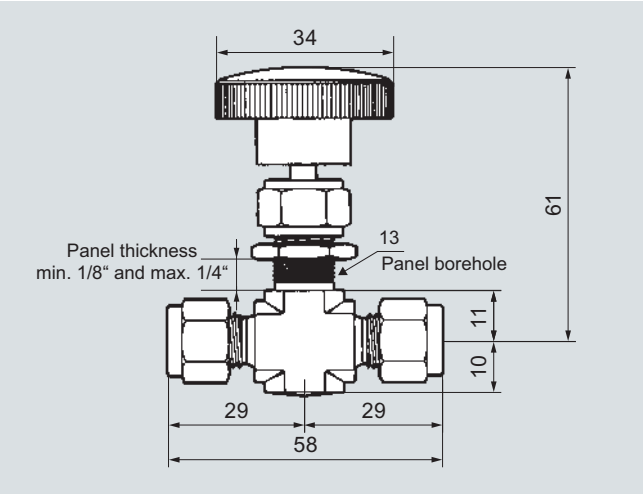

Needle valve made of stainless steel

Low-pressure overflow valve

Application

To protect against overpressure during gas preparation.

Technical specifications

Connection	For pipe with 6 mm outer diameter
Max. permissible pressure	20 bar at 21 °C
Permissible temperature range	-23 ... +204 °C
Adjustment range of opening pressure	0.69 ... 15 bar
Materials	Steel SS316 (mat. no. 1.4401), Viton, PTFE

Selection and ordering Data

	Order No.
Adjustable overflow valve	
Adjustment range of opening pressure 0.69 ... 15 bar	**7MB1 943-2EC06**

Dimensional drawings

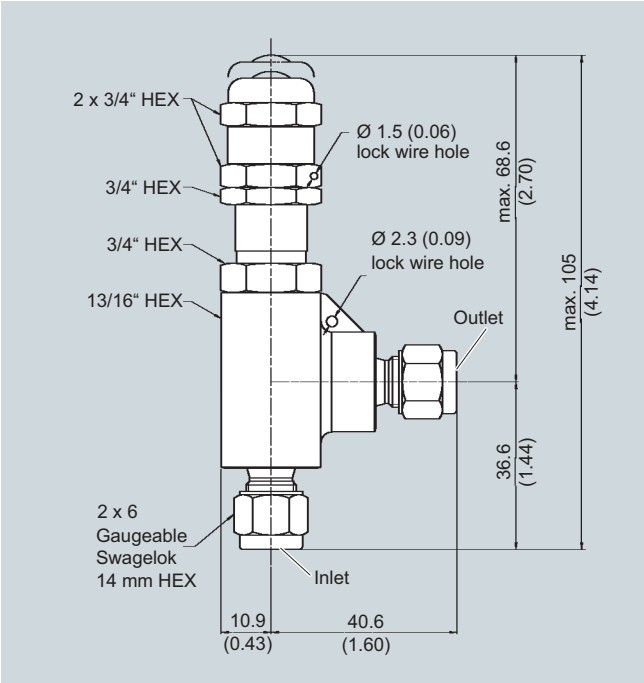

Low-pressure overflow valve

Non-return valves

Overview

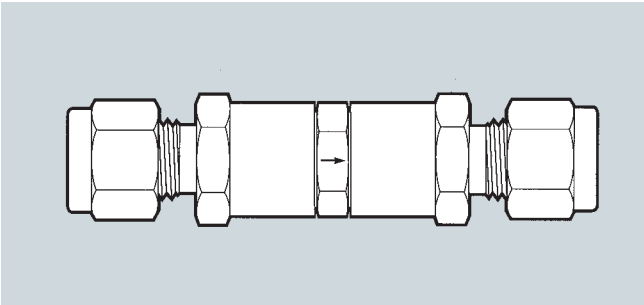

Adjustable check valve

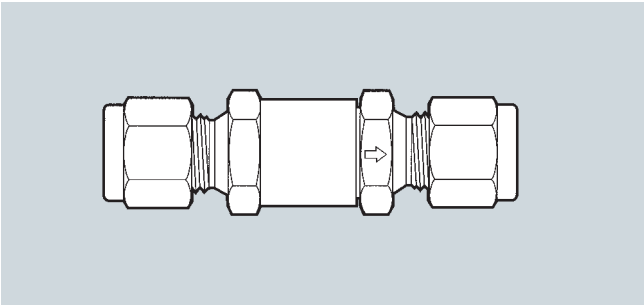

Non-adjustable check valve

Application

The adjustable check valve is used to protect against overpressure in the sample gas line of the analyzer.

The non-adjustable check valve is used to protect against reverse flows of the sample into the analyzer. It prevents analyzer systems from receiving a reverse flow of exhaust should pressure variations occur in the exhaust line.

Technical specifications

Connection	For pipe with 6 mm outer diameter
Max. permissible pressure	205 bar at 21 °C
Permissible temperature range	-25 ... +190 °C
Materials	Steel SS316 (mat. no. 1.4401), Viton, PTFE

Selection and ordering Data

	Order No.
Adjustable check valve	
Adjustment range of opening pressure	
0.2 ... 3.5 bar	**7MB1 943-2EC00**
3.5 ... 10 bar	**7MB1 943-2EC02**
Non-adjustable check valve	
Adjustment range of opening pressure 0.02 bar differential pressure	**7MB1 943-2EC04**

Shut-off ball valve for low temperatures

Application

The shut-off ball valve is used to shut off the flow of sample gas.

Design

Gas-tight at both high and low operating pressures, Teflon gasket fills out the hollow space and prevents accumulation of contamination.

Technical specifications

Material	
• Body, ball system	X 10 CrNiMoTi 18 10, mat. no. 1.4401
• Handle	Nylon, black
• Gasket	Teflon
Permissible ambient and sample gas temperature	10 ... 65 °C
Max. permissible operating pressure at 21 °C	175 bar
Connection	For pipe with 6 mm outer diameter
Weight	Approx. 0.3 kg

Note

On delivery, the shut-off ball valves are set for a pressure of 70 bar. At higher pressures, it may be necessary to tighten the packing further (1/8 rotation is sufficient).

Selection and ordering Data

	Order No.
Shut-off ball valve	**7MB1 943-2BA20**
With 3.2 mm bore	

Zubehör

A supporting sleeve is required for each gas duct when using a Teflon hose 4 x 6.

	Order No.
Stainless steel supporting sleeve	
For hose 4/6	**7MB1 943-2DA10**
For hose 6/8	**7MB1 940-6AB01**

Dimensional drawings

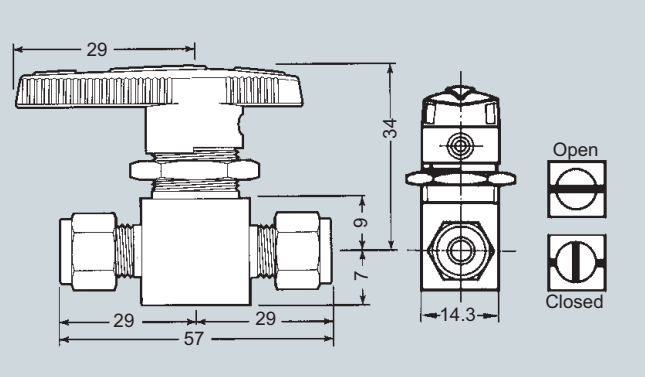

Shut-off ball valve, dimensions and valve positions

Shut-off ball valve for high temperatures

Application

The shut-off ball valve is used to shut off the flow of sample gas.

Technical specifications

Materials	
• Ball	Stainless steel SS316 (mat. no. 1.4401)
• Packing ring	PEEK
• Packing	Reinforced PTFE
Max. temperature	235 °C
Max. pressure	
• At -29 … +38 °C	151 bar
• At 235 °C	7 bar
Connection	For pipe with 6 mm outer diameter

Selection and ordering Data

	Order No.
Shut-off ball valve	**7MB1 943-2EA02**

Dimensional drawings

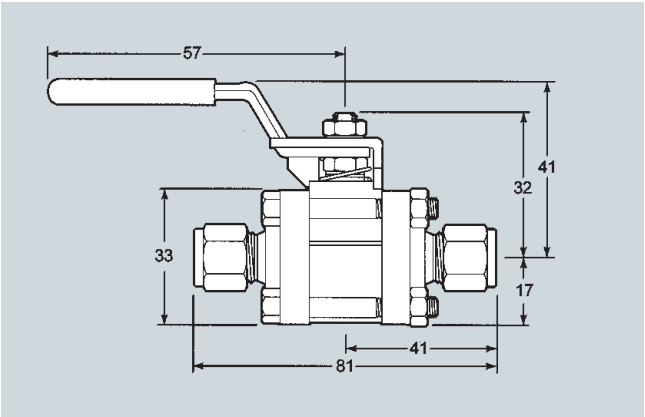

Shut-off ball valve

Multiway ball valves made of stainless steel

Application

For switching over gas flows.

Technical specifications

3/2-way ball valve	7MB1 943-2EA08	7MB1 943-2BA22
Max. pressure		175 bar
• At -30 ... +40 °C	70 bar	
• At -55 ... +150 °C		68 bar
• At 235 °C (max.)	7 bar	
Connections		
• Connection on side	For pipe with 6 mm outer diameter	
• Connection at bottom	1/4 NPT, female thread	
Materials		
• Ball	Stainless steel body SS316 (mat. no. 1.4401)	
• Packing ring	PEEK	–
• Packing	Reinforced PTFE	PFA/D3307

5-way ball valve	7MB1 943-2EA20
Max. permissible operating pressure at 21 °C	68 bar
Max. permissible ambient and sample gas temperature	65 °C
Connection	For pipe with 6 mm outer diameter
Material	Twist knob: nylon Body: stainless steel 316 Packing: TFE ID 1760
Weight	Approx. 0.3 kg

Selection and ordering Data

	Order No.
3/2-way ball valve made of stainless steel	
For max. pressure 70 bar	**7MB1 943-2EA08**
For max. pressure 210 bar	**7MB1 943-2BA22**
5-way ball valve made of stainless steel	**7MB1 943-2EA20**

Dimensional drawings

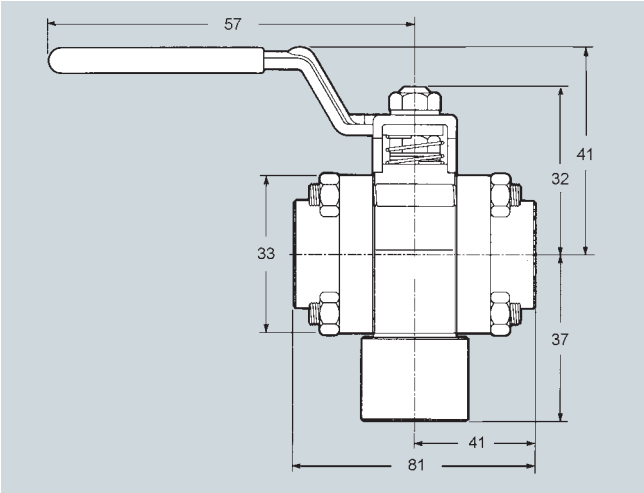

3/2-way ball valve 7MB1 943-2EA08 for high temperatures

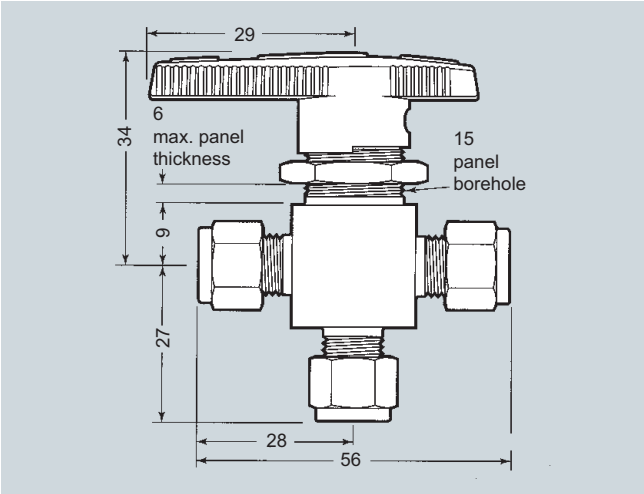

3/2-way ball valve 7MB1 943-2BA22 for ambient temperatures

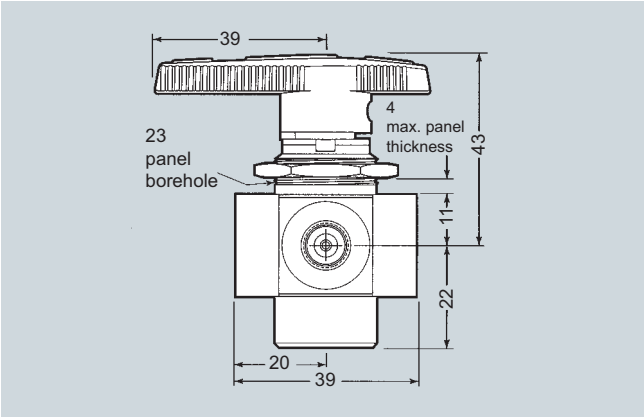

5-way ball valve

Control assemblies for shut-off ball valves

Application

The control assembly is required to pneumatically open and close the respective ball valve.

Control assembly 7MB1 943-2EA00

By applying a control medium with a specific inlet pressure, the ball valve is opened or closed depending on the mode of operation.

Spring reset in the unpressurized state.

Control assembly 7MB1 943-2EA10

By applying a control medium with a specific inlet pressure, the position of the ball valve is moved through 180°. Application: e.g. switching over from sample gas to calibration/zero gas.

Spring reset in the unpressurized state.

Dimensional drawings

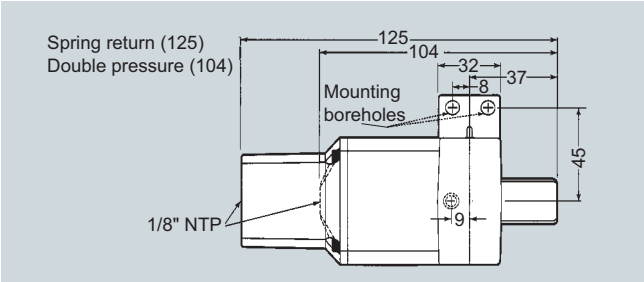

Control assembly for shut-off ball valve

Technical specifications

Min. control pressure	3.5 bar
Max. control pressure	
• 7MB1 943-2EA00	13.5 bar
• 7MB1 943-2EA10	13.5 bar
Permissible temperature	-30 ... +95 °C
Connection	¼NPT, female thread

Selection and ordering Data

	Order No.
Control assembly for shut-off ball valve	
For max. control pressure of 13.5 bar	
• Swivel range 90°	**7MB1 943-2EA00**
• Swivel range 180°	**7MB1 943-2EA10**

Accessories

	Order No.
Mounting set for ball valve	
For control assembly 7MB1 943-2EA00	
• Ball valve 7MB1 943-2EA02	**7MB1 943-2EA04**
• Ball valve 7MB1 943-2BA20	**7MB1 943-2EA06**
For control assembly 7MB1 943-2EA10	
• Ball valve 7MB1 943-2EA08	**7MB1 943-2EA04**
• Ball valve 7MB1 943-2BA22	**7MB1 943-2EA06**

Shut-off and multiway ball valves made of PVDF

Application

To shut off and switch over gases. Also suitable for highly corrosive gases.

Technical specifications

Gas connection	Screw-in fitting G¼
Nominal diameter	4 mm
Permissible operating overpressure	10 bar
Max. permissible sample temperature	140 °C
Max. permissible ambient temperature	90 °C[1)]
Material of parts wetted by the sample gas	Polyvinylfluoride (PVDF) / Viton
Type of mounting	With mounting clamp

[1)] 140 °C on request

Selection and ordering Data

	Order No.
Shut-off ball valve made of PVDF With mounting clamps	**7MB1 943-2BA25**
3-way ball valve made of PVDF With mounting clamps	**7MB1 943-2BA30**
5-way ball valve made of PVDF With mounting clamp	**7MB1 943-2BA35**
Spacer for wall mounting for 5-way ball valve	**7MB1 943-2BA40**
Male coupling G¼ made of PVDF For Teflon hose with 6 mm outer diameter	see „Fittings/Fittings made of PVDF"“

Dimensional drawings

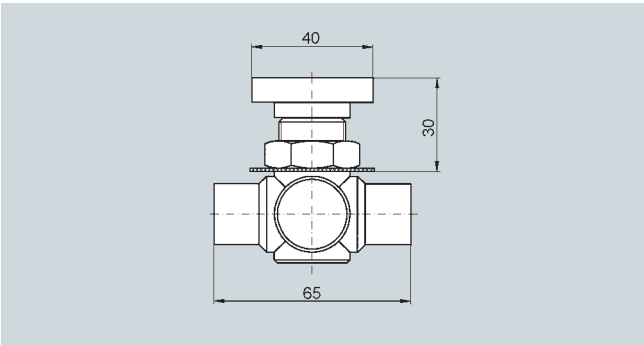

Shut-off ball valve

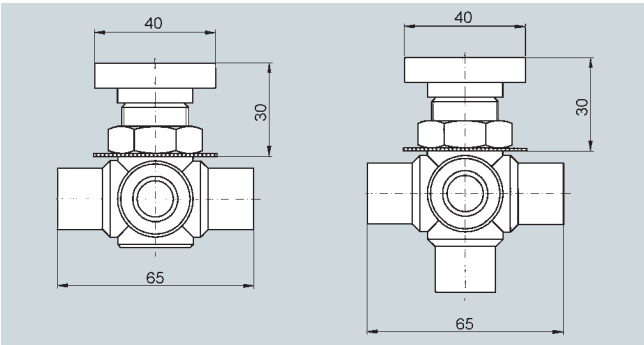

3-way and 5-way ball valves

Technical specifications

Brief characteristics	• Hinged armature valve with manual override • Direct-acting with seal diaphragm • Suitable for a wide range of aggressive media
Permissible pressure range	
• With 230 V AC power supply	0 ... 4 bar above atmospheric pressure
• With 24 V DC power supply	0 ... 2 bar above atmospheric pressure
Nominal diameter	4 mm
Seal material	Kalrez (FFKM, perfluoro elastomer)
Gas connection	G 3/8 female thread
Electric connection	Appliance socket with LED and varistor (not included in scope of delivery)
Degree of protection acc. to EN 60529	IP65
Installation position	Any
Power supply	230 V AC, 50 Hz, 40 VA (startup), 8 VA (operation) or 24 V DC, 8 W (operation)
Principle of operation	Closed when deenergized
Ambient temperature	Max. +50 °C
Weight	Approx. 0.32 kg

Selection and ordering Data

	Order No.
2/2-way solenoid valve made of PVDF[1)]	
Power supply 230 V AC, 50 Hz	**7MB1 943-2BA50**
Power supply 24 V DC	**7MB1 943-2BA55**

[1)] 2 screw-in fittings are also required (not included in scope of delivery)

Accessories

	Order No.
Appliance socket acc. to DIN EN 175301-803, form A, with LED and varistor	
For 12 … 24 V AC/DC	**7MB1 943-2BB20**
For 200 … 240 V AC/DC	**7MB1 943-2BB22**

Dimensional drawings

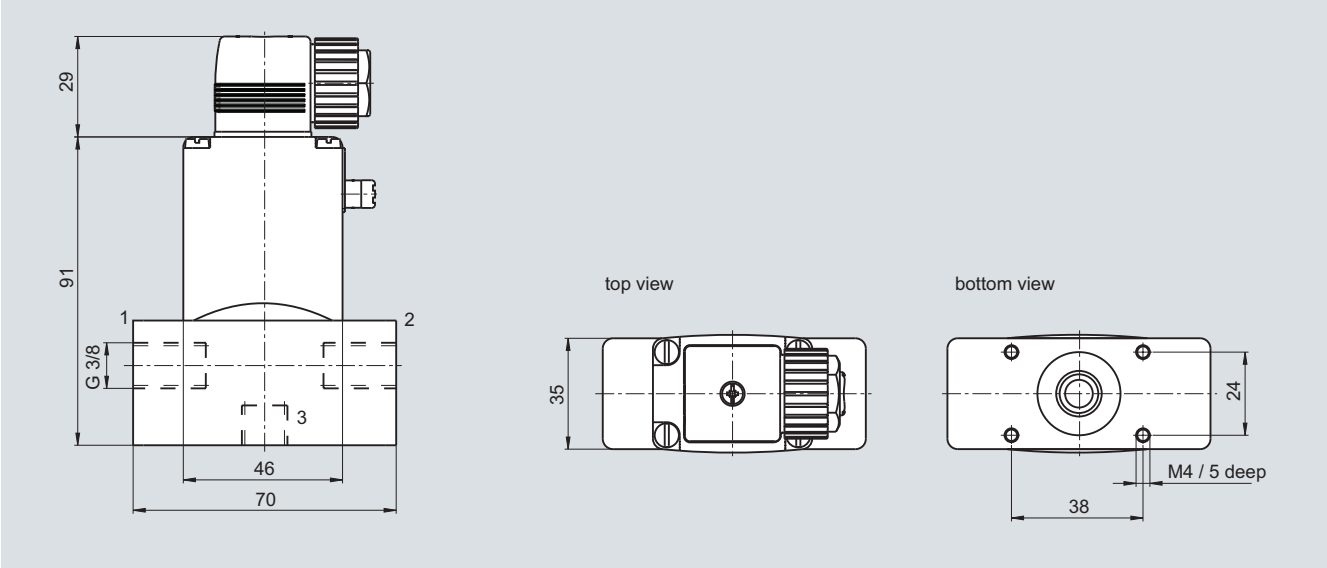

2/2-way solenoid valve 24/230 V made of PVDF, with appliance socket

Solenoid valves

Made of stainless steel

Technical specifications

Brief characteristics	Small solenoid valve, direct acting
Permissible pressure range	
• With 230 V AC power supply	0 ... 10 bar above atmospheric pressure
• With 24 V DC power supply	0 ... 6 bar above atmospheric pressure
Nominal diameter	3 mm
Seal material	Viton (FKM)
Gas connection	G 1/8 female thread
Electric connection	Appliance socket with LED and varistor (not included in scope of delivery)
Degree of protection acc. to EN 60529	IP65
Installation position	Any
Power supply	230 V AC, 50 Hz, 17 VA (startup), 14 VA (operation) or 24 V DC, 8 W
Principle of operation	Closed when deenergized
Ambient temperature	Max. +55 °C
Weight	Approx. 0.3 kg

Selection and ordering Data

	Order No.
2/2-way solenoid valve made of stainless steel[1)]	
Power supply 230 V AC, 50 Hz	**7MB1 943-2BA60**
Power supply 24 V DC	**7MB1 940-1HA01**

[1)] 2 screw-in fittings are also required (not included in scope of delivery)

Accessories

	Order No.
Appliance socket acc. to DIN EN 175301-803, form A, with LED and varistor	
For 12 … 24 V AC/DC	**7MB1 943-2BB20**
For 200 … 240 V AC/DC	**7MB1 943-2BB22**

Dimensional drawings

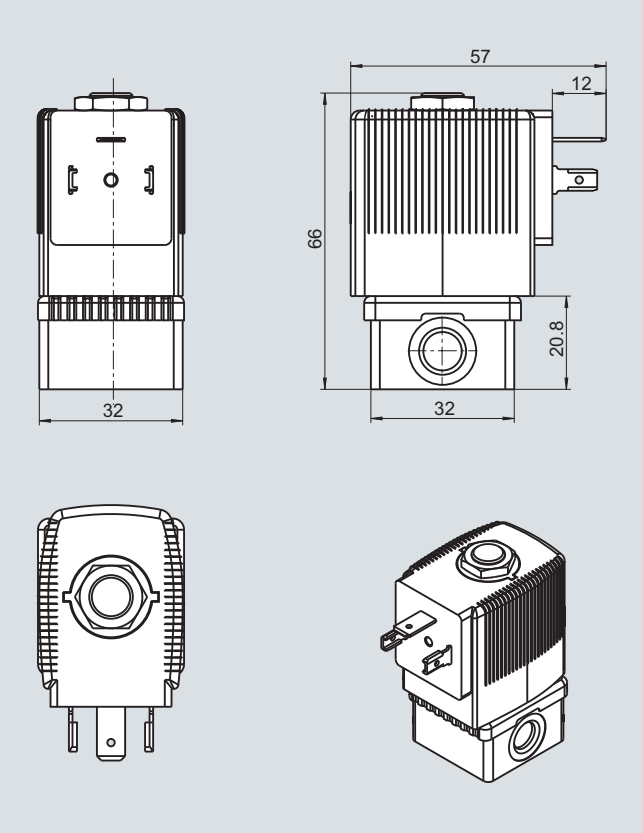

2/2-way solenoid valve 24/230 V made of stainless steel, without appliance socket

Technical specifications

Brief characteristics	2/2-way small solenoid valve, direct acting
Permissible pressure range	0 ... 10 bar above atmospheric pressure
Nominal diameter	2 mm
Enclosure material	Stainless steel mat. no. 1.4305
Seal material	Viton (FKM)
Gas connection	G 1/4 female thread
Electric connection	Explosion-proof terminal box with M 20 x 1.5 cable gland, without fuse (fuse available as accessory)
Degree of protection acc. to EN 60529	IP65
Installation position	Any, preferably with operating mechanism upwards
Power supply	230 V AC, 50 Hz, 9 VA (operation) or 24 V DC, 9 W
Coil size	40 mm
ATEX approval and device identification	• PTB 00 ATEX 2129 X • II 2G EEx em II T4 • II 2D IP65 T=135 °C
Principle of operation	Closed when deenergized
Ambient temperature	-30 °C … +60 °C
Weight	Approx. 0.74 kg

Selection and ordering Data

	Order No.
2/2-way solenoid valve made of stainless steel, explosion-proof[1)]	
Power supply 230 V AC, 50 Hz	**7MB1 943-2BA86**
Power supply 24 V DC	**7MB1 943-2BA87**

1) 2 screw-in fittings are also required (not included in scope of delivery).

Accessories

	Order No.
Medium-slow device fuse for explosion-proof solenoid valves, for fitting in the terminal box, for coil rating 9 W	
100 mA fuse for power supply 230 V AC, 50 Hz	**7MB1 943-2BC02**
1 A fuse for power supply 24 V DC	**7MB1 943-2BC03**

Dimensional drawings

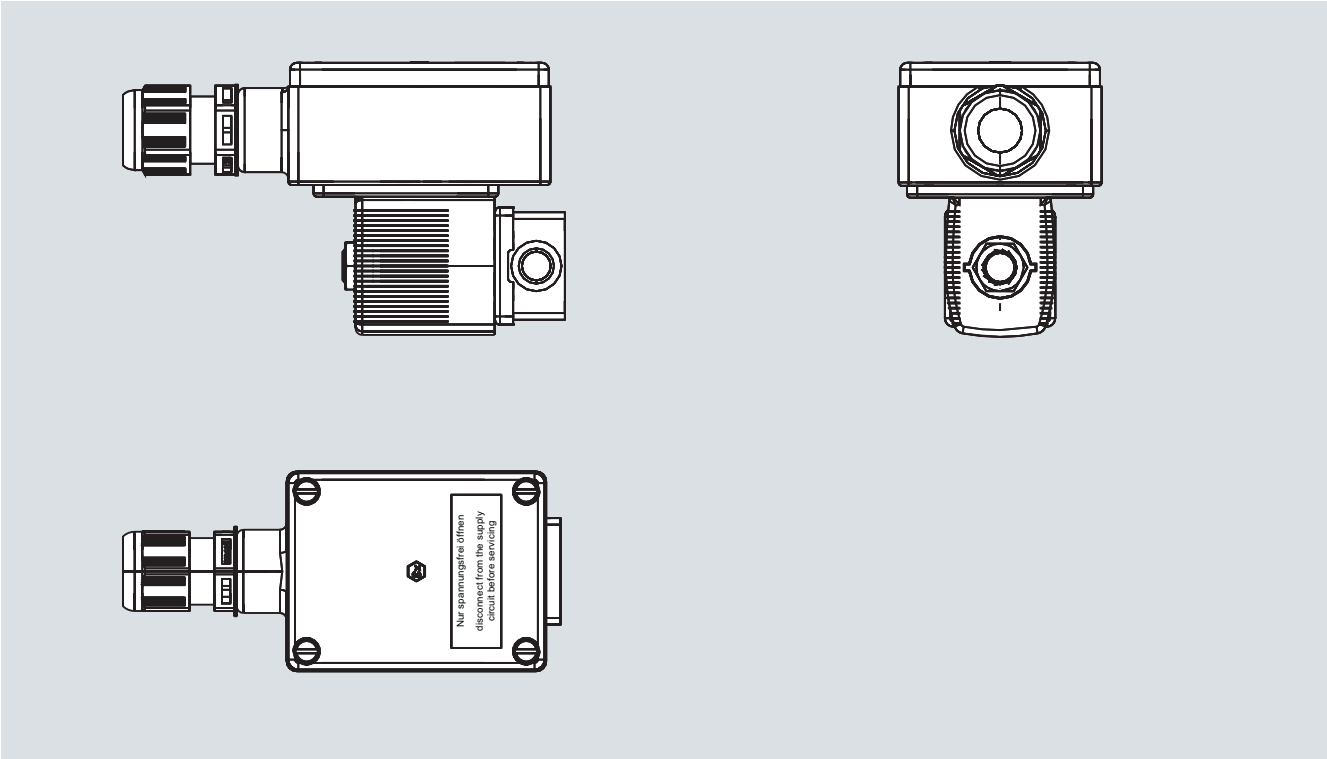

2/2-way solenoid valve made of stainless steel, explosion-proof

Solenoid valves

3/2-way solenoid valve, as mixing valve Made of PVDF

Technical specifications

Brief characteristics	• Hinged armature valve with manual override • Direct-acting with seal diaphragm • Suitable for a wide range of aggressive media
Permissible pressure range	
• With 230 V AC power supply	0 ... 2 bar above atmospheric pressure
• With 24 V DC power supply	0 ... 1 bar above atmospheric pressure
Nominal diameter	4 mm
Seal material	Kalrez (FFKM, perfluoro elastomer)
Gas connection	G 3/8 female thread
Electric connection	Appliance socket with LED and varistor (not included in scope of delivery)
Degree of protection acc. to EN 60529	IP65
Installation position	Any
Power supply	230 V AC, 50 Hz, 40 VA (startup), 8 VA (operation) or 24 V DC, 8 W (operation)
Ambient temperature	Max. +50 °C
Weight	Approx. 0.32 kg

Selection and ordering Data

	Order No.
3/2-way solenoid valve made of PVDF[1)]	
Power supply 230 V AC, 50 Hz	**7MB1 943-2BA65**
Power supply 24 V DC	**7MB1 943-2BA67**

1) 3 screw-in fittings are also required (not included in scope of delivery)

Accessories

	Order No.
Appliance socket acc. to DIN EN 175301-803, form A, with LED and varistor	
For 12 … 24 V AC/DC	**7MB1 943-2BB20**
For 200 … 240 V AC/DC	**7MB1 943-2BB22**

Dimensional drawings

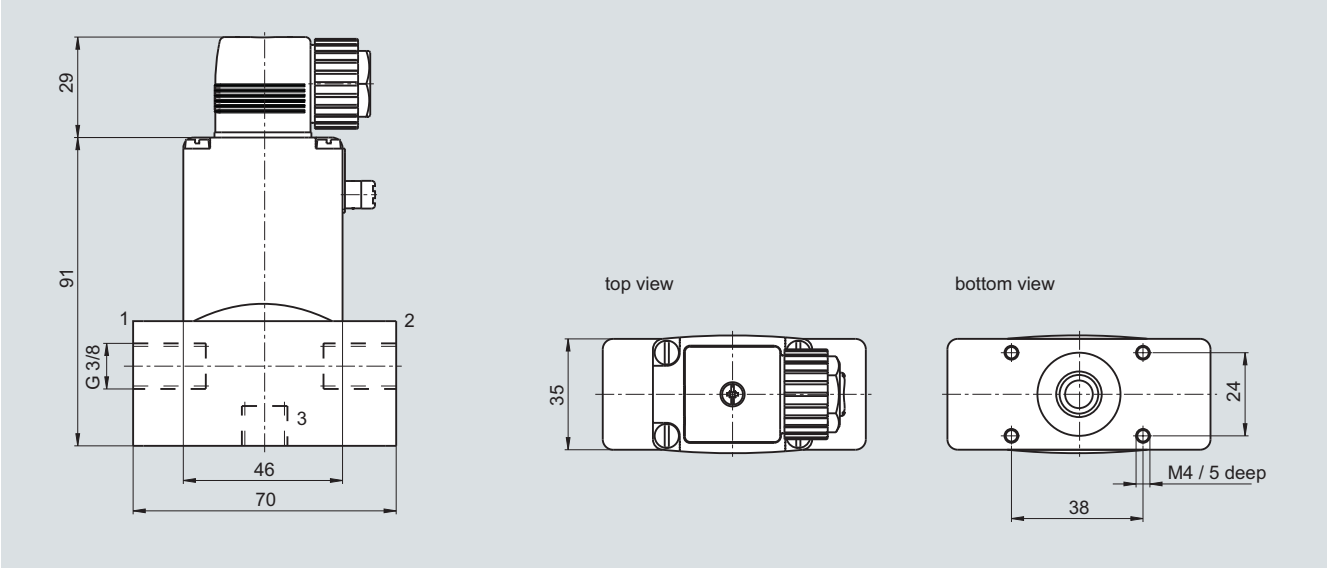

3/2-way solenoid valve 24/230V made of PVDF, with appliance socket

3/2-way solenoid valve, as mixing valve
Made of stainless steel, for corrosive, dry gases

Technical specifications

Brief characteristics	• Hinged armature valve with seal diaphragm • With lockable manual override
Permissible pressure range	0 ... 3 bar above atmospheric pressure
Nominal diameter	4 mm
Seal material	Viton (FKM)
Gas connection	G 1/8 female thread
Electric connection	Appliance socket with LED and varistor (not included in scope of delivery)
Degree of protection acc. to EN 60529	IP65
Installation position	Any
Power supply	230 V AC, 50 Hz, 30 VA (startup), 8 VA (operation) or 24 V DC, 8 W (operation)
Ambient temperature	Max. +55 °C
Weight	Approx. 0.4 kg

Selection and ordering Data

	Order No.
3/2-way solenoid valve made of stainless steel[1)]	
Power supply 230 V AC, 50 Hz	**7MB1 943-2BA70**
Power supply 24 V DC	**7MB1 943-2BA75**

[1)] Three screw-in fittings are also required (not included in scope of delivery)

Accessories

	Order No.
Appliance socket acc. to DIN EN 175301-803, form A, with LED and varistor	
For 12 … 24 V AC/DC	**7MB1 943-2BB20**
For 200 … 240 V AC/DC	**7MB1 943-2BB22**

Dimensional drawings

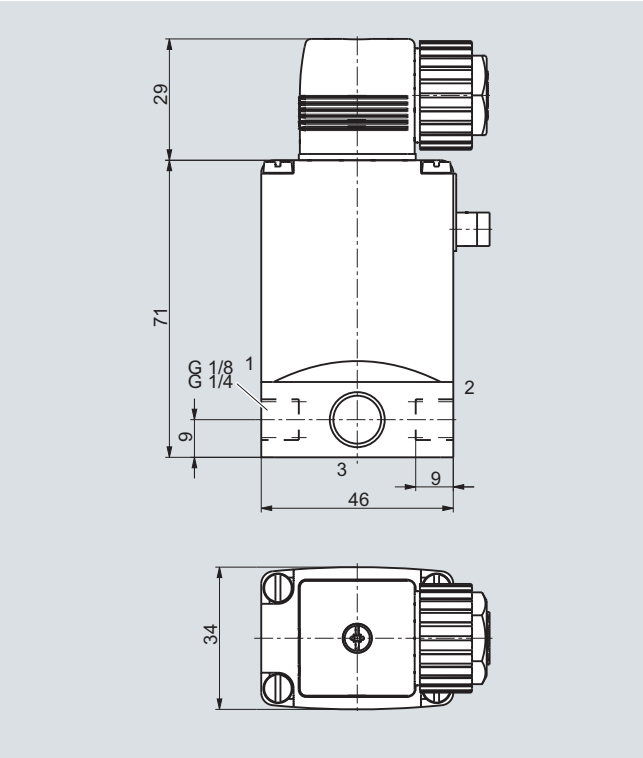

3/2-way solenoid valve 24/230 V made of stainless steel, with appliance socket

Solenoid valves

3/2-way solenoid valve, as mixing valve
Made of stainless steel, explosion-proof

Technical specifications

Brief characteristics	3/2-way small solenoid valve, direct acting
Permissible pressure range	0 ... 7 bar above atmospheric pressure
Nominal diameter	1.5 mm
Enclosure material	Stainless steel mat. no. 1.4305
Seal material	Viton (FKM)
Gas connection	G 1/4 female thread
Electric connection	Explosion-proof terminal box with M 20 x 1.5 cable gland, without fuse (fuse available as accessory)
Degree of protection acc. to EN 60529	IP65
Installation position	Any, preferably with operating mechanism upwards
Power supply	230 V AC, 50 Hz, 9 VA (operation) or 24 V DC, 9 W
Coil size	40 mm
ATEX approval and device identification	• PTB 00 ATEX 2129 X • II 2G EEx em II T4 • II 2D IP65 T=135 °C
Principle of operation	3/2-way, for universal use
Ambient temperature	-30 … +60 °C
Weight	Approx. 0.74 kg

Selection and ordering Data

	Order No.
3/2-way solenoid valve made of stainless steel, explosion-proof[1)]	
Power supply 230 V AC, 50 Hz	**7MB1 943-2BA88**
Power supply 24 V DC	**7MB1 943-2BC01**

1) 2 screw-in fittings are also required (not included in scope of delivery)

Accessories

	Order No.
Medium-slow device fuse for explosion-proof solenoid valves, for fitting in the terminal box, for coil rating 9 W	
100 mA fuse for power supply 230 V AC, 50 Hz	**7MB1 943-2BC02**
7MB1 943-2BC031 A fuse for power supply 24 V DC	**7MB1 943-2BC03**

Dimensional drawings

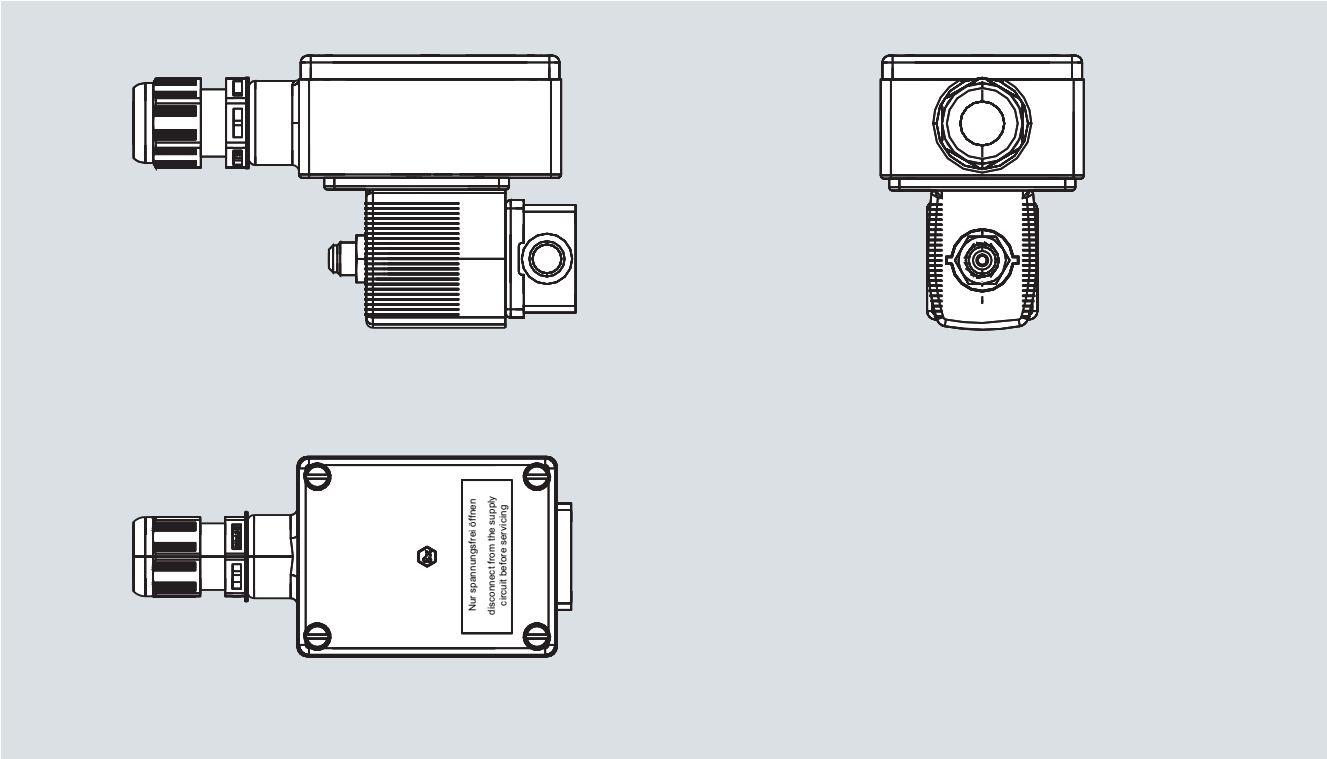

3/2-way solenoid valve made of stainless steel, explosion-proof

Appliance socket acc. to DIN EN 175301-803, form A, with LED and varistor

Technical specifications

Material	
• Enclosure	Polycarbonate
• Contacts	Brass, silver-plated
Max. continuous temperature	90 °C
Cable diameter	6 ... 7 mm
Number of poles	2 pins + PE conductor
Electric connection	Terminals, max. 1.5 mm^2
Seal between coil and socket	Flat gasket 1.5 mm
Degree of protection acc. to EN 60529	IP65
Status display	LED, red

Selection and ordering Data

	Order No.
Appliance socket acc. to DIN EN 175301-803, form A	
For 12 … 24 V AC/DC, max. 6 A	**7MB1 943-2BB20**
For 200 … 240 V AC/DC, max. 6 A	**7MB1 943-2BB22**

Dimensional drawings

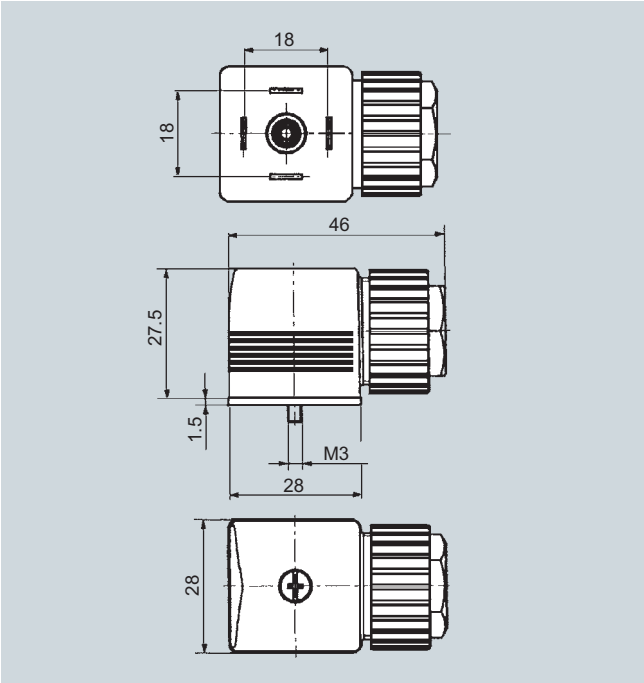

Appliance socket acc. to DIN EN 175301-803, form A

All-metal flowmeter

Application

To measure and display volume flows. Since the flowmeter is made completely of metal, it is primarily suitable for use in process measuring systems with high pressures and under rough operating conditions.

The flowmeter is available with or without a limit signal transmitter. An isolating switching amplifier is required when using a limit signal transmitter (see “Flowmeter/Isolating switching amplifier”).

Technical specifications

Max. permissible operating pressure	130 bar at 21 °C
Permissible sample temperature	
• Without limit signal transmitter	-80 ... +150 °C
• With limit signal transmitter	-80 ... +140 °C
Connection	Female thread ¼ NPT
Material	
• Heads	Stainless steel (mat. no. 1.4581)
• Valve, plug, cone, float	CrNi steel (mat. no. 1.4571)
• Enclosure	Die-cast aluminum
• Gasket	PTFE
Weight	Approx. 0.9 kg

Selection and ordering Data

	Order No.
All-metal flowmeter	
Without limit signal transmitter	
• For air as medium (1013 mbar, 20 °C)	
- Sample gas to analyzer, measuring range 10 ... 100 l/h	**7MB1 943-2BB50**
- Fast loop standard, measuring range 40 ... 400 l/h	**7MB1 943-2BB53**
- Fast loop large, measuring range 80 ... 800 l/h	**7MB1 943-2BB58**
• For water as medium (20 °C)	
- Medium to sensor, measuring range 1 ... 10 l/h	**7MB1 943-2BB60**
- Medium to sensor, measuring range 4 ... 40 l/h	**7MB1 943-2BB62**
- Medium to sensor, measuring range 8 ... 80 l/h	**7MB1 943-2BB64**
With limit signal transmitter	
• For air as medium (1013 mbar, 20 °C)	
- Sample gas to analyzer, measuring range 10 ... 100 l/h	**7MB1 943-2BB51**
- Fast loop standard, measuring range 40 ... 400 l/h	**7MB1 943-2BB52**
- Fast loop large, measuring range 80 ... 800 l/h	**7MB1 943-2BB55**
• For water as medium (20 °C)	
- Medium to sensor, measuring range 1 ... 10 l/h	**7MB1 943-2BB61**
- Medium to sensor, measuring range 4 ... 40 l/h	**7MB1 943-2BB63**
- Medium to sensor, measuring range 8 ... 80 l/h	**7MB1 943-2BB65**

Dimensional drawings

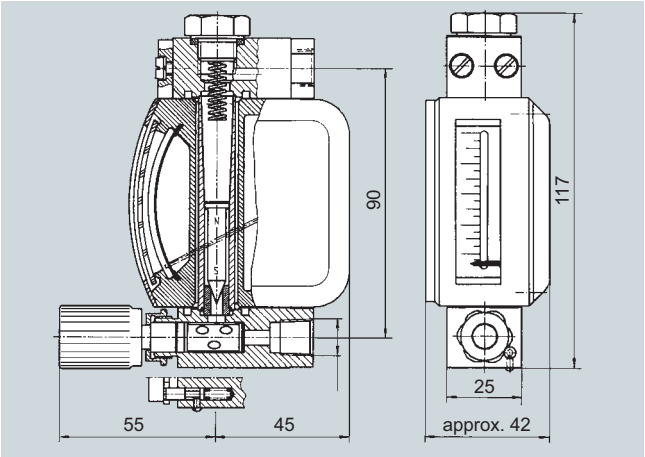

All-metal flowmeter DK32

Application

To measure and display volume flows. The flowmeter version with PEEK float is also suitable for corrosive gases.

The flowmeter works according to the variable-area measuring principle and therefore does not cause a delay in indication.

The flow is adjusted using a precision valve.

The flowmeter is available with or without a limit signal transmitter. An isolating switching amplifier is required when using a limit signal transmitter (see “Flowmeter/Isolating switching amplifier”).

Technical specifications

Flowmeter	
Measuring range	10 ... 100 l gas/h
Materials	
• Heads	PVDF
• Cone	Borosilicate glass
• Float	
- 7MB1 943-2BB30/35	Stainless steel (mat. No. 1.4401)
- 7MB1 943-2BB31/36	PEEK
• Gasket	Viton
Gas connection	G¼ female thread
Max. permissible operating pressure	6 bar
Weight	Approx. 0.4 kg
Limit signal transmitter	
Rated voltage	8 V DC
Current consumption	
• Active area free	3 mA
• Active area covered	1 mA
Inherent inductance	170 µH
Inherent capacitance	90 nF
Permissible ambient temperature	-25 ... +100 °C
Degree of protection to EN 60529	IP67

Selection and ordering Data

	Order No.
Flowmeter	
Measuring range 10 … 100 l/h	
• Without limit signal transmitter	**7MB1 943-2BB30**
• With limit signal transmitter	**7MB1 943-2BB35**
Flowmeter for corrosive gases	
Measuring range 10 … 100 l/h	
• Without limit signal transmitter	**7MB1 943-2BB31**
• With limit signal transmitter	**7MB1 943-2BB36**

Accessories

2 male couplings, G¼ female thread, may also be required, see „Fittings/Fittings made of PVDF“.

Dimensional drawings

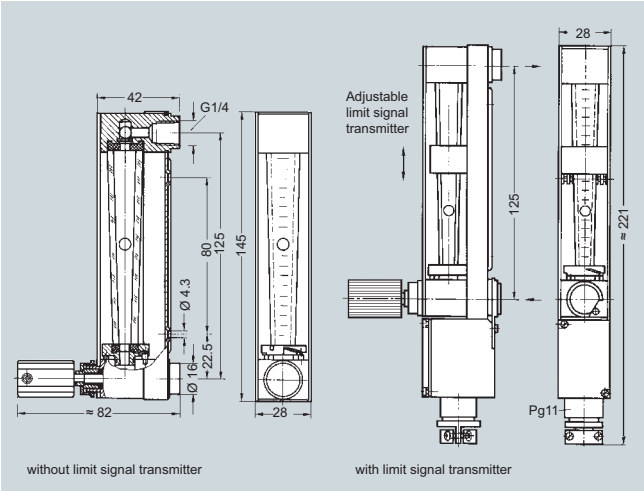

Flowmeter DK 800

Isolating switch amplifier

Overview

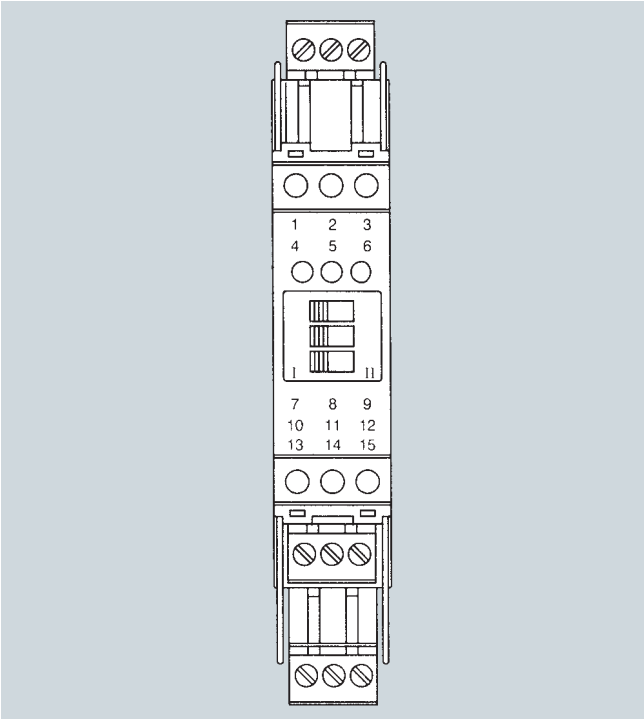

Isolating switching amplifier, front view

Application

- Inputs (intrinsically-safe) acc. to DIN EN 60947-5-6 (NAMUR) or mechanical contacts
- Control circuits EEx ia IIC
- Reversible direction of control action
- Signal outputs (not intrinsically-safe) with changeover contact max. 253 V AC / 2 A
- EMC according to EN 61326, NAMUR NE 21
- Electrical isolation according to EN 50020

Technical specifications

Switching capacity	Signal outputs (not intrinsically-safe) with changeover contact max. 253 V; 2 A
Ambient temperature	-20 ... +60 °C
Dimensions (L x W x H) in mm	120 x 20 x 115 (DIN rail mounting)
Degree of protection	Control circuit EEx ia IIC
Weight	Approx. 0.15 kg

Selection and ordering Data

	Order No.
Isolating switching amplifier	
24 V DC	
• 1-channel	**7MB1 943-2BB41**
• 2-channel	**7MB1 943-2BB42**
230 V AC, 45 … 65 Hz	
• 1-channel	**7MB1 943-2BB43**
• 2-channel	**7MB1 943-2BB44**
115 V AC, 45 … 65 Hz	
• 1-channel	**7MB1 943-2BB46**
• 2-channel	**7MB1 943-2BB47**

Accessories

2 male couplings, G¼ female thread, may also be required, see „Fittings/Fittings made of PVDF“.

Schematics

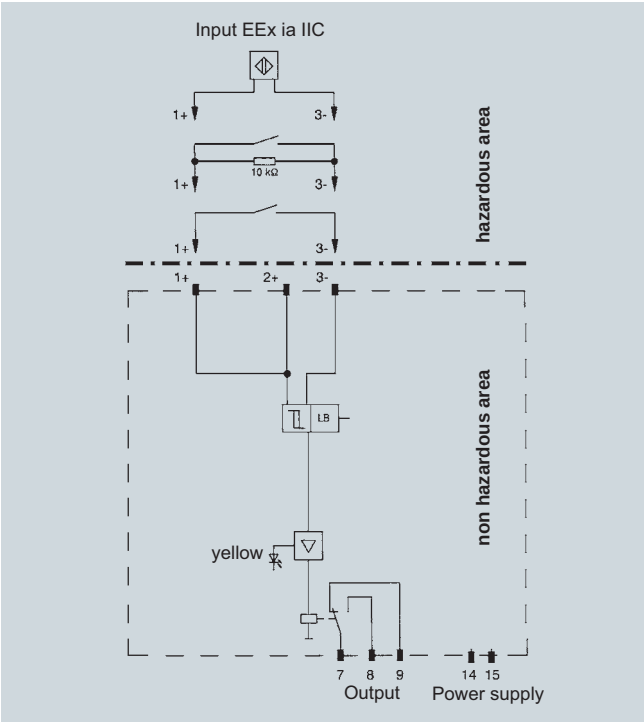

Isolating switching amplifier, schematic diagram (1 channel)

Overview

Single-stage pressure reducer for N_2 or O_2 and for calibration gases for connection to gas cylinders

Application

For use with OXYMAT gas analyzers for reference gases N_2 and O_2. Chromium-plated brass enclosure. The single-stage pressure reducer is also available in a stainless steel version for corrosive calibration gases. For connection to gas cylinders.

Version with contact manometer on the high-pressure side

Electric signal when a minimum pressure is reached allows early replacement of gas cylinder.

Technical specifications

Single-stage pressure reducer for connection to gas cylinders	
Gas connection, outlet	Threaded joint for pipe with 6 mm outer diameter (clamping ring connection)
Inlet pressure	Max. 200 bar
Outlet pressure range	0.5 ... 4 bar
Temperature range	-20 ... +70 °C
Contact manometer	
Type of contact	Inductive contact, isolating switch amplifier required
ATEX identification of inductive contact sensor	II 2 G EEx ia IIC T6
Connecting cable length	Approx. 1 m

Selection and ordering Data

	Order No.
Single-stage pressure reducer for connection to gas cylinders	
For N_2, DIN 477 No. 10, brass	**7MB1 943-1PB01-2AB3**
For O_2, DIN 477 No. 9, brass	**7MB1 943-1PB01-2AB5**
For calibration gas, DIN 477 No. 14, stainless steel	**7MB1 943-1PA01-2AB6**
For calibration gas, DIN 477 No. 14, stainless steel, with inductive contact manometer	**7MB1 943-1PA01-2AC6**

Accessories

An isolating switching amplifier is required to use the inductive contact (see "Flowmeters/isolating switching amplifier").

Pressure reducers

Single-stage pressure reducer For installation in pipes

Overview

Single-stage pressure reducer for installation in pipes

Application

For corrosive gases (stainless steel enclosure) or non-corrosive gases (chromium-plated brass enclosure). For installation in pipes.

Technical specifications

Single-stage pressure reducer for installation in pipes	
Gas connection, inlet and outlet	1/4" NPT
Inlet pressure (outlet pressure controller)	Max. 241 bar
Outlet pressure range (outlet pressure controller)	0.1 ... 1.7 bar or 0.1 ... 7 bar
Inlet pressure (inlet pressure controller)	Corresponds to pressure control range
Inlet pressure range (inlet pressure controller)	0 ... 1.7 bar
Temperature range	-26 ... +80 °C

Selection and ordering Data

	Order No.
Single-stage pressure reducer for installation in pipes	
Outlet pressure range 0.1 … 1.7 bar (outlet pressure controller)	
• For corrosive gases; material: stainless steel	**7MB1 943-1MA01-1CB1**
• For corrosive gases and high temperatures up to 150 °C; material: stainless steel	**7MB1 943-1MA01-1EB1**
• For non-corrosive gases; material: chromium-plated brass	**7MB1 943-1MB01-1CB1**
Outlet pressure range 0.1 … 7 bar (outlet pressure controller)	
• For corrosive gases; material: stainless steel	**7MB1 943-1MA01-3CB1**
• For non-corrosive gases; material: chromium-plated brass	**7MB1 943-1MB01-3CB1**
Inlet pressure range 0 … 1.7 bar (inlet pressure controller)	
• For corrosive gases; material: stainless steel	**7MB1 943-1TA01-1CB1**

Overview

Two-stage pressure reducer for connection to gas cylinders

Application

Two-stage pressure reducer with metal diaphragms for corrosive and non-corrosive gases for connection to gas cylinders.

Housing with minimized dead space, made of stainless steel (for corrosive gases) or chromium-plated brass (for non-corrosive gases).

When using Teflon hose 4 x 6 instead of piping, always ensure that the connection between the hose and the clamping ring connection is secure.

Version with contact manometer on the high-pressure side

Electric signal when a minimum pressure is reached allows early replacement of gas cylinder.

Technical specifications

Two-stage pressure reducer for connection to gas cylinders	
Gas connection, outlet	Threaded joint for pipe or hose with 6 mm outer diameter (clamping ring connection)
Inlet pressure	Max. 200 bar
Outlet pressure range	0.1 ... 1.5 bar or 1 ... 10 bar
Temperature range	-20 ... +70 °C
Contact manometer	
Type of contact	Inductive contact, isolating switch amplifier required
ATEX identification of inductive contact sensor	II 2 G EEx ia IIC T6
Connecting cable length	Approx. 1 m

Selection and ordering Data

	Order No.
Two-stage pressure reducer for connection to gas cylinders	
Outlet pressure range 0.1 … 1.5 bar	
• For corrosive gases; material: stainless steel	**7MB1 943-1QA01-1AB***
• For non-corrosive gases; material: chromium-plated brass	**7MB1 943-1QB01-1AB***
Outlet pressure range 1 … 10 bar	
• For corrosive gases; material: stainless steel	**7MB1 943-1QA01-3AB***
• For non-corrosive gases; material: chromium-plated brass	**7MB1 943-1QB01-3AB***
Two-stage pressure reducer with inductive contact manometer on the high-pressure side for connection to gas cylinders	
Outlet pressure range 0.1 … 1.5 bar	
• For corrosive gases; material: stainless steel	**7MB1 943-1QA01-1AC***
• For non-corrosive gases; material: chromium-plated brass	**7MB1 943-1QB01-1AC***
Outlet pressure range 1 … 10 bar	
• For corrosive gases; material: stainless steel	**7MB1 943-1QA01-3AC***
• For non-corrosive gases; material: chromium-plated brass	**7MB1 943-1QB01-3AC***

Type of gas	Cylinder connection acc. to DIN 477	* Replace by (last digit of Order No.)
Hydrogen H_2	No. 1	**2**
Nitrogen N_2	No. 10	**3**
Synthetic air or oxygen O_2	No. 9	**5**
Calibration gas mixtures	No. 14	**6**

Accessories

An isolating switching amplifier is required to use the inductive contact (see "Flowmeters/isolating switching amplifier").

Pressure reducers

Twin cylinder station for two calibration gas cylinders

Overview

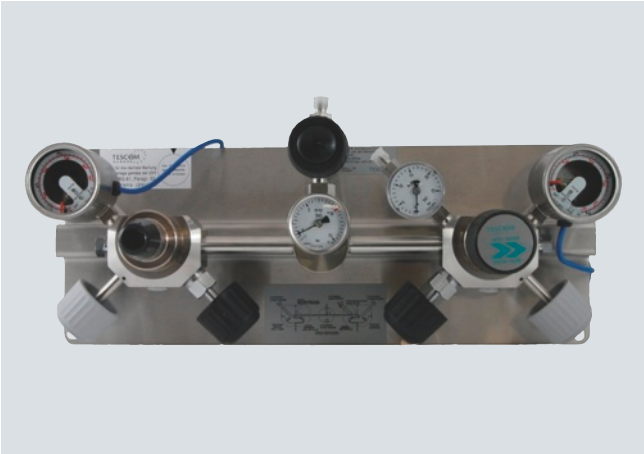

Twin cylinder station for two calibration gas cylinders

Application

Two-stage cylinder station with automatic switchover for connection of two gas cylinders; stainless steel or nickel-plated brass construction.

When using Teflon hose 4 x 6 instead of piping, always ensure that the connection between the hose and the clamping ring connection is secure.

Version with contact manometer on the high-pressure side

Electric signal when a minimum pressure is reached allows early replacement of gas cylinder.

Technical specifications

Two-stage cylinder station for connection of two gas cylinders	
Gas connection, outlet	Threaded joint for pipe or hose with 6 mm outer diameter (clamping ring connection)
Inlet pressure	Max. 200 bar
Outlet pressure range	5 ... 17 bar
Temperature range	-20 ... +70 °C
Contact manometer	
Type of contact	Inductive contact, isolating switch amplifier required
ATEX identification of inductive contact sensor	II 2 G EEx ia IIC T6
Connecting cable length	Approx. 1 m

Selection and ordering Data

	Order No.
Two-stage cylinder station for connection of two gas cylinders	
Without contact manometer	
· With stainless steel enclosure	**7MB1 943-1RA01-4AB7**
· With nickel plated brass enclosure	**7MB1 943-1RB01-4AB7**
With contact manometer on the high-pressure side	
· With stainless steel enclosure	**7MB1 943-1RA01-4AC7**
· With nickel plated brass enclosure	**7MB1 943-1RB01-4AC7**

Accessories

Two connection shafts are required per cylinder station to connect the latter to the gas cylinders, approved for max. 200 bar.

Type of gas	Cylinder connection acc. to DIN 477	Order No.
Hydrogen H_2	No. 1	**7MB1 943-1UA01-4AA2**
Nitrogen N_2	No. 10	**7MB1 943-1UA01-4AA3**
Helium He	No. 6	**7MB1 943-1UA01-4AA4**

An isolating switching amplifier is required to use the inductive contact (see "Flowmeters/isolating switching amplifier").

Technical specifications

Cylinder body	Steel, seamless, or aluminum alloy	
Connection thread acc. to DIN 477 O_2 above 21 vol.%	M19 x 1.5 left-hand, No. 14, DIN 477, No. 9	
Filling pressure		
Standard	150 bar	
With CO_2 > 17% and SF6 > 6.2%	< 150 bar	
Tolerance	Manufacturer's tolerance[1]	Analytical accuracy[1]
Component concentration		
• 1 ... 99 ppm	± 10 %	± 2 ... ± 5 %
• 100 ... 999 ppm	± 5 %	± 2 %
• 0.1 ... 4.9 %	± 2 %	± 2 %
• 5 ... 50 %	± 1 %	± 1 %
Cylinder identification		
Stamped identification	According to TRG 102	
Analysis certificate	Under cylinder cap	
Item no.	On cylinder shoulder	
Cylinder color	According to European standard DIN EN 1089-3	
	Cylinder body	Shoulder
• Inert gases	Blue	Bright green
• Oxidizing gases	Blue[2]	Light blue
• Flammable gases	Blue	Red
• Toxic gases	Blue	Yellow
Storage temperature		
Winter delivery	-10 ... +40 °C	
Summer delivery	+10 ... +40 °C	

Before use, the calibration gases must be left for at least 24 h to ensure the right temperature and homogenization.

Test
In accordance with transport regulations (GGVS) and pressurized container regulations (TRG 102), pressurized containers must be regularly tested by an approved expert.

Dimensions (including cap)	
10-l steel cylinder	Diameter 140 mm, length approx. 1 000 mm
10-l aluminum cylinder	Diameter 140 mm, length approx. 1 100 mm
Weight (empty, including cap)	
10-l steel cylinder	Approx. 20 kg
10-l aluminum cylinder	Approx. 12 kg

[1] Referred to component concentration

[2] Exceptions are possible

Selection and ordering Data

		Order No.
10-l cylinder with one calibration gas component in residual gas N_2 with certificate		
Calibration gas		
• CO	> 10 vpm	**7MB1 943-5AA00**
• NO	> 100 vpm	**7MB1 943-5AA01**
	> 20 vpm	**7MB1 943-5AA02**
• SO_2	> 100 vpm	**7MB1 943-5AA03**
	> 10 vpm	**7MB1 943-5AA04**
• O_2	< 21 %	**7MB1 943-5AA05**
	> 21 %	**7MB1 943-5AA26**
• CO_2	< 17 %	**7MB1 943-5AA06**
	> 17 %	**7MB1 943-5AA07**
• H_2	% v/v	**7MB1 943-5AA08**
• SF_6	> 100 vpm	**7MB1 943-5AA28**
• SF_6	> 6.2 %	**7MB1 943-5AA10**
• C_3H_8	> 10 < 100 vpm	**7MB1 943-5AA27**
• CH_4	< 5 %	**7MB1 943-5AA31**
Calibration gas concentration Specify in plain text		**Concentration ... vpm** or **... %** or **... mg/m³**

10-l cylinder with two calibration gas components in residual gas N_2 with certificate				
Calibration gas component 1		Calibration gas component 2		
CO	> 10 vpm	O_2	< 21 %	**7MB1 943-5AA11**
CO	> 10 vpm	NO	> 100 vpm	**7MB1 943-5AA12**
CO	> 10 vpm	CO_2	< 17 %	**7MB1 943-5AA13**
		CO_2	> 17 %	**7MB1 943-5AA14**
CO	> 10 vpm	SO_2	> 100 vpm	**7MB1 943-5AA15**
		SO_2	> 10 vpm	**7MB1 943-5AA16**
SO_2	> 100 vpm	O_2	< 21 %	**7MB1 943-5AA17**
	> 10 vpm			**7MB1 943-5AA18**
SO_2	> 100 vpm	NO	> 100 vpm	**7MB1 943-5AA30**
Calibration gas concentration Specify in plain text				
Calibration gas component 1				**Concentration ... vpm**
Calibration gas component 2				**Concentration ... vpm** or **... %** or **... mg/m³**

10-l cylinder with three calibration gas components in residual gas N_2 with certificate			
Calib. gas comp. 1	Calib. gas comp. 2	Calib. gas comp. 3	
CO > 10 vpm	CO_2 < 17 %	O_2 < 21 %	**7MB1 943-5AA20**
	CO_2 > 17 %		**7MB1 943-5AA21**
CO > 10 vpm	SO_2 > 100 vpm	O_2 < 21 %	**7MB1 943-5AA22**
CO > 10 vpm	CO_2 < 17 %	H_2	**7MB1 943-5AA23**
	CO_2 > 17 %		**7MB1 943-5AA24**
CO > 10 vpm	NO > 100 vpm	SO_2 > 100 vpm	**7MB1 943-5AA25**
Calibration gas concentration specify in plain text			
Calibration gas component 1			**Concentration ... vpm**
Calibration gas component 2			**Concentration ... vpm** or **... %**
Calibration gas component 3			**Concentration ... vpm** or **... %** or **... mg/m³**
Further designs			
Special labeling of cylinder Specify in plain text: (max. 10 characters, e.g. owner's name)			**.....**

Gases

Pure gases

Technical specifications

Cylinder body	Steel, seamless	
Max. filling pressure	200 bar	
Cylinder identification		
Stamped identification	According to TRG 101	
Identification of contents	On cylinder shoulder (with purity data)	
Item no.	On cylinder shoulder	
TÜV marking	Stamped on cylinder	
Cylinder color	According to European standard DIN EN 1089-3	
	Cylinder body	Shoulder
• Hydrogen	Red	Red
• Nitrogen	Gray	Black
• Oxygen	Blue[1)]	White
• Synthetic air	White[1)]	White with black ring
Storage temperature	-20 ... +50 °C	
Test	In accordance with transport regulations (GGVS) and pressurized container regulations (TRG 101), pressurized containers for pure gases must be regularly tested by an approved expert.	
Dimensions (including cap)		
10-l cylinder	Diameter 140 mm, length approx. 1 000 mm	
50-l cylinder	Diameter 230 mm, length approx. 1 700 mm	
Weight		
10-l cylinder	Approx. 16 kg	
50-l cylinder	Approx. 70 kg	

1) Exceptions are possible

Selection and ordering Data

Pure gas	Purity	Connection thread acc. to DIN 477	Cylinder size	Order No.
Hydrogen H_2	5.0	W 21.80 x 1/14 left-hand	10 l	**7MB1 943-5AB00**
	5.0	(No. 1)	50 l	**7MB1 943-5AB02**
Nitrogen N_2	4.6	W 24.32 x 1/14 right-hand	10 l	**7MB1 943-5AB04**
	5.0	(No. 10)	10 l	**7MB1 943-5AB05**
	4.6		50 l	**7MB1 943-5AB06**
	5.0		50 l	**7MB1 943-5AB07**
Oxygen O_2	5.0	R ¾ right-hand (No. 9)	50 l	**7MB1 943-5AB11**
Synthetic air	C_nH_m < 0.1 vpm	R ¾ right-hand (No. 9)	10 l	**7MB1 943-5AB08**
			50 l	**7MB1 943-5AB10**
Special labeling				
Specify in plain text: (max. 10 characters, e.g. owner's name)				.....

Application

Monitoring the reference gas pressure (N_2 or air) of gas cylinders.

If the pressure drops, the solenoid valve switches the sample gas to a bypass. This routes the sample gas past the OXYMAT into the open air.

The following are required for reference gas monitoring (see Ordering data):

- Pressure switch with screw-in fitting G 1/4[1)]
- T-piece
- 3-way solenoid valve with three screw-in fittings G 1/8

1) Omitted if pressure switch is fitted in OXYMAT 6

Technical specifications

Aluminum pressure switch	
Pressure transfer	Plastic diaphragm sensor system
Medium	N_2 or air
Switching element	Microswitch with gold-plated contacts
• Load capacity of isolated contact at 220 V	Max. 3 A
Switching pressure range	0.5 ... 8 bar
Switching pressure difference	
• At start-of-scale	0.25 bar
• At full-scale	0.65 bar
Limit (= max. test pressure)	80 bar
Gas connection	G¼
Permissible ambient temperature	-10 ... +80 °C
Degree of protection	IP65
Material in pressure sensor	• Enclosure: Aluminum • Seal: Perbunan
Weight	Approx. 0.2 kg
3-way solenoid valve	
Material of parts wetted by the sample gas	Stainless steel
Gas connections	G1/8 female thread
Electric connection	Cable head, degree of protection IP65
Power supply	230 V AC, 50 ... 60 Hz or 24 V DC
Weight	Approx. 0.3 kg

Dimensional drawings

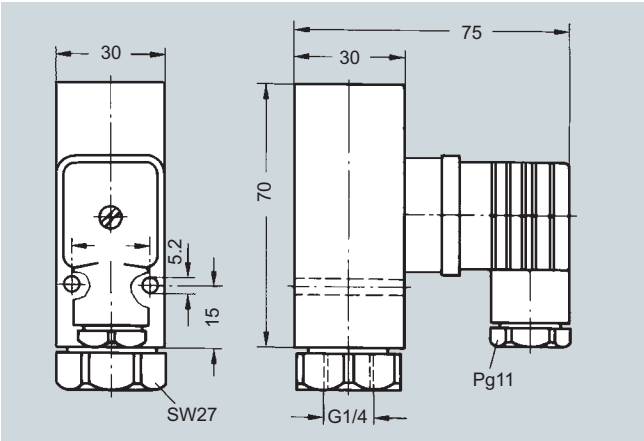

Pressure switch for non-corrosive gases

Selection and ordering Data

	Order No.
Pressure switch For N_2 or air from gas cylinder, switching pressure range 0.5 … 8 bar	**7MB1 940-1NA00**
3/2-way solenoid valve	
Stainless steel, 230 V AC	**7MB1 943-2BA70**
Stainless steel, 24 V DC	**7MB1 943-2BA75**
Straight stainless steel threaded joint for pipe with 6 mm outer diameter	
G1/8 for solenoid valve	**7MB1 943-2DA40**
G1/4 for pressure switch	**7MB1 943-2DA42**
T-piece Stainless steel, for pipe with 6 mm outer diameter	**7MB1 940-6AF00**

Schematics

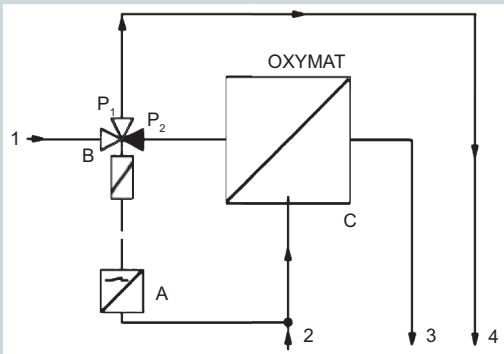

B	Solenoid valve
C	OXYMAT gas analyzer
1	Sample gas from gas preparation equipment
2	Reference gas inlet
3	Sample gas outlet
4	Bypass outlet

Reference gas monitoring, function diagram

NO2/NO converter

Overview

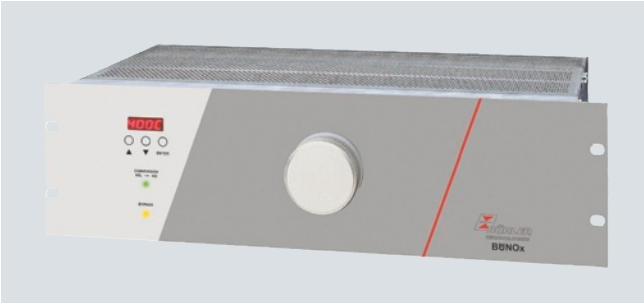

Benefits

- High conversion rate at low temperature (400 °C)
- High NO_2 conversion capability (300 ppm)
- Long service life
- Easy replacement of converter cartridge without tools
- Temperature control by microcontroller
- Adjustable converter temperature
- Temperature alarm contact
- 4 to 20 mA temperature output
- Status LEDs
- Bypass solenoid valves (optional)
- 19" rack unit

Application

Conversion of NO_2 content in dry sample gases (following sample gas cooler) into NO. The gas components NO_x = NO + NO_2 and NO_2 can then be measured directly and indirectly using the ULTRAMAT 23 and ULTRAMAT 6 respectively.

Design

The NO_2-NO converter is available as a 19" rack unit.

A converter with bypass solenoid valves is also available. The maintenance effort is minimized through the special reactor fastener on the front panel. This allows rapid replacement of the cartridge without tools. The temperature of the converter is adjustable using an easy-to-handle microcontroller.

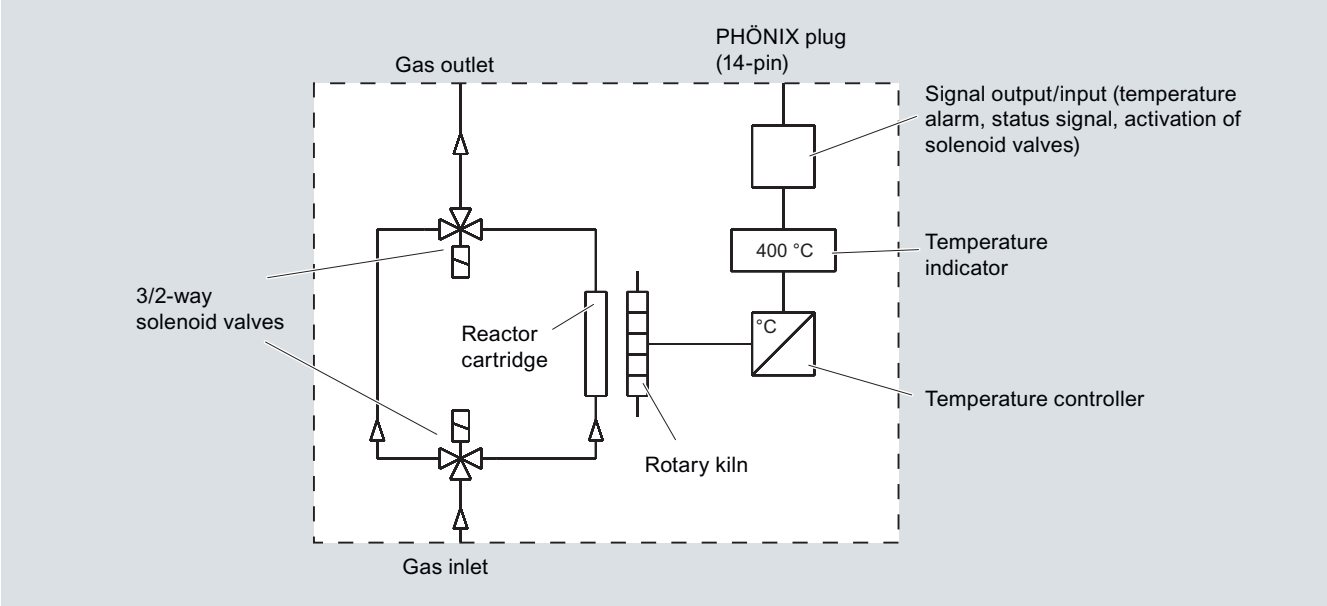

Internal layout

Mode of operation

The NO_2 is converted into NO in a heated reactor cartridge. The reactor filing and the special design of the reactor cartridge even enable the conversion of very high NO concentrations at a comparatively low temperature. Interferences caused by the cartridge on other typical components present in flue gases such as CO, CO_2 , NO and SO_2 are not observed.

Technical specifications

Operating temperature	400 °C
Operational readiness	After a warm-up time of approx. 30 min
Gas inlet conditions	
Sample gas pressure	Max. 1.5 bar a
Sample gas flow	Max. 120 l/h (max. 2 l/min)
Sample gas temperature	5 … 80 °C
Dew point	< 10 °C
Climatic conditions	
Permissible ambient temperature	
• Operation	5 … 50 °C
• Storage and transport	-20 … +70 °C
Permissible ambient humidity	< 80 % relative humidity for storage and transport
Electrical specifications	
Power supply	115 V AC or 230 V AC 50/60 Hz, plug according to DIN 43650
Power consumption	Approx. 650 W
Electrical inputs and outputs (14 pin PHÖNIX connector)	
Status: Overtemperature, undertemperature	Changeover contact, max. 230 V AC/DC, 1 A
Analog output (temperature)	4 … 20 mA
Status: Bypass; conversion	Changeover contact, max. 230 V AC/DC, 1 A
Activation of solenoid valves	24 V DC, ~1 mA, by means of external switch
Dimensions	
19" rack unit, 3 HU	133 x 483 x 285 (H x W x D)
Degree of protection	IP20 (EN 60529)
Conversion properties (NO_2 -> NO)	
Degree of conversion NO_2 -> NO	≥ 97 % with new cartridge
Cartridge service life	Depending on load > 12 months (see diagram, determined under laboratory conditions)
Maximum load	Approx. 400 ppm NO_2 at 70 l/h
Conversion temperature	400 °C

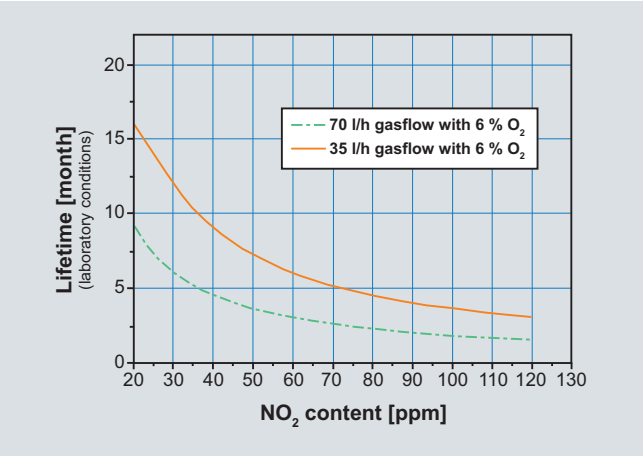

Selection and ordering Data

	Order No.
NO_2-NO converter	
230 V, 50/60 Hz	**7MB1 943-2DB40**
115 V, 50/60 Hz	**7MB1 943-2DB41**
NO_2-NO converter with bypass valve	
230 V, 50/60 Hz	**7MB1 943-2DB43**
115 V, 50/60 Hz	**7MB1 943-2DB44**
Replacement reactor cartridge	**7MB1 943-2DB42**

4

Fittings made of PVDF

Overview

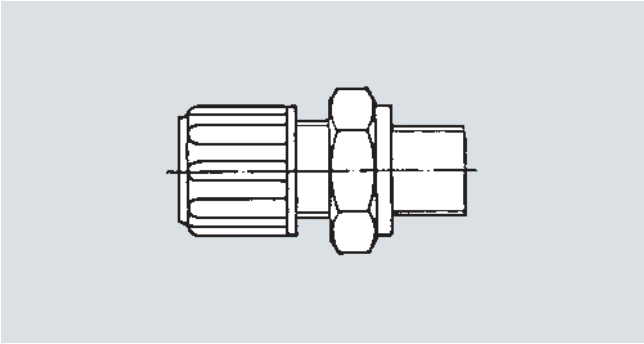

Straight male coupling

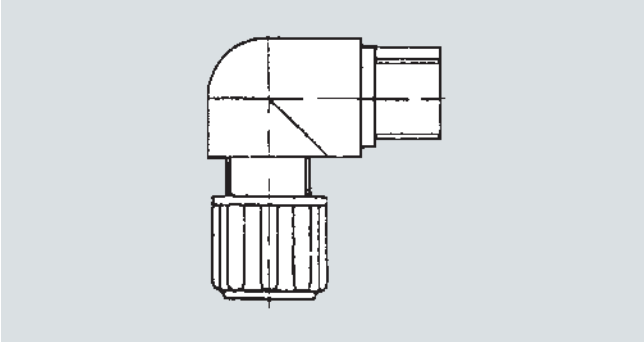

Elbow male coupling

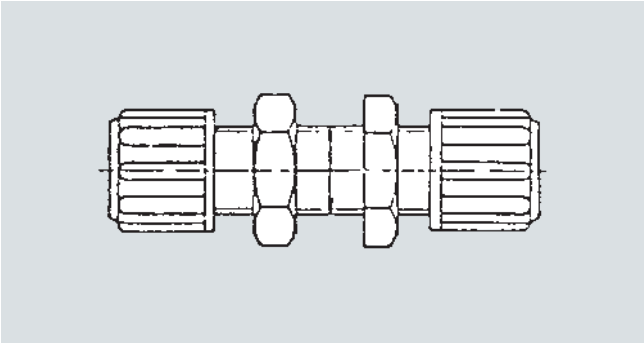

Bulkhead union

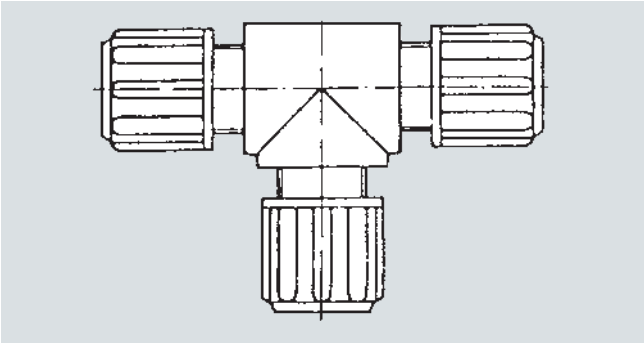

T-coupling

Selection and ordering Data

	Order No.
PVDF couplings for PTFE hose DN 4/6	
Straight male coupling G 1/8	**7MB1 940-6AA08**
Straight male coupling G 1/4	**7MB1 940-6AA06**
Straight male coupling G 3/8	**7MB1 943-2DA02**
Elbow male coupling G 1/8	**7MB1 943-2DA12**
Elbow male coupling G 1/4	**7MB1 943-2DA15**
Elbow male coupling G 3/8	**7MB1 943-2DA16**
PVDF couplings for PTFE hose DN 4/6	
Bulkhead union	**7MB1 943-2DA18**
T-coupling	**7MB1 943-2DA17**
Elbow coupling	**7MB1 943-2DA06**

Overview

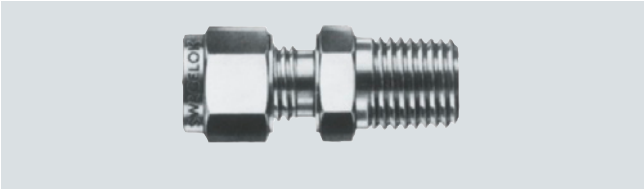

Straight male coupling NPT

Elbow male coupling NPT

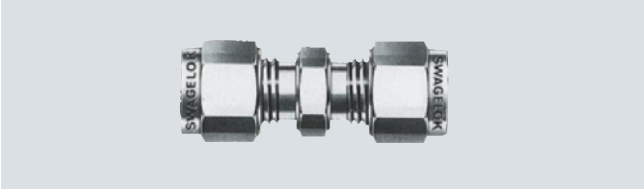

Straight male coupling

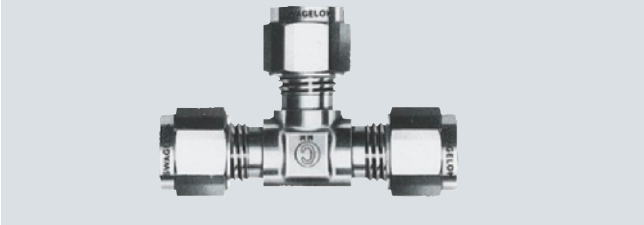

T-coupling

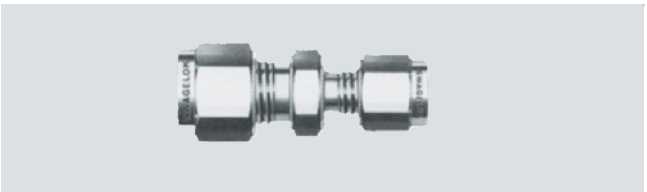

Straight reducer coupling

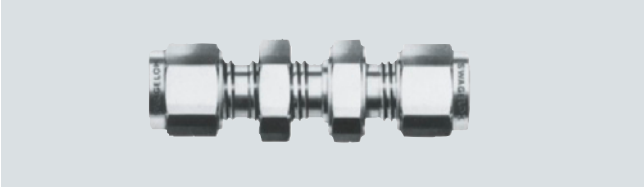

Straight bulkhead union

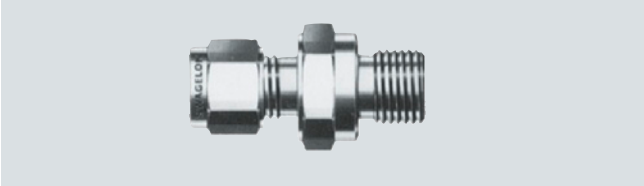

Straight male coupling

Selection and ordering Data

	Order No.
Stainless steel fittings	
For pipe with 6 mm outer diameter	
• Straight male coupling 1/8 NPT	**7MB1 943-2DA13**
• Straight male coupling 1/4 NPT	**7MB1 943-2DA20**
• Elbow male coupling 1/8 NPT	**7MB1 943-2DA21**
• Elbow male coupling 1/4 NPT	**7MB1 943-2DA22**
• Straight coupling to connect pipes with 6 mm outer diameter	**7MB1 943-2DA27**
• T-coupling to connect pipes with 6 mm outer diameter	**7MB1 940-6AF00**
• Straight bulkhead union to connect pipes with 6 mm outer diameter	**7MB1 943-2DA32**
• Straight male coupling G 1/8	**7MB1 943-2DA40**
• Straight male coupling G 1/4	**7MB1 943-2DA42**
For pipe with 8 mm outer diameter	
• Straight male coupling 1/4 NPT	**7MB1 940-6AA01**
• Straight male coupling 3/8 NPT	**7MB1 943-2DA14**
• Elbow male coupling 1/4 NPT	**7MB1 943-2DA24**
• Elbow male coupling 3/8 NPT	**7MB1 943-2DA26**
• Straight coupling to connect pipes with 8 mm outer diameter	**7MB1 943-2DA28**
• T-coupling to connect pipes with 8 mm outer diameter	**7MB1 943-2DA30**
• Straight bulkhead union to connect pipes with 8 mm outer diameter	**7MB1 943-2DA33**
• Straight male coupling G 1/4	**7MB1 943-2DA43**
• Straight male coupling G 3/8	**7MB1 943-2DA45**
For connection of pipes with 6 mm and 8 mm outer diameters	
• Straight reducer coupling	**7MB1 940-6AC00**

Accessories

	Order No.
Stainless steel supporting sleeve	
For hose 4/6	**7MB1 943-2DA10**
For hose 6/8	**7MB1 940-6AB01**
PTFE hose 4/6 (per m) Natural color, suitable for clamping ring coupling methods	**7MB1 943-2DB10**

4

Notes

Measuring equipment

5

5/2 Gas measuring and warning systems
5/2 Sensors for explosive gases and vapors
5/5 Sensors for monitoring threshold limit values
5/7 8022 evaluation unit and accessories

Sensors for explosive gases and vapors

Overview

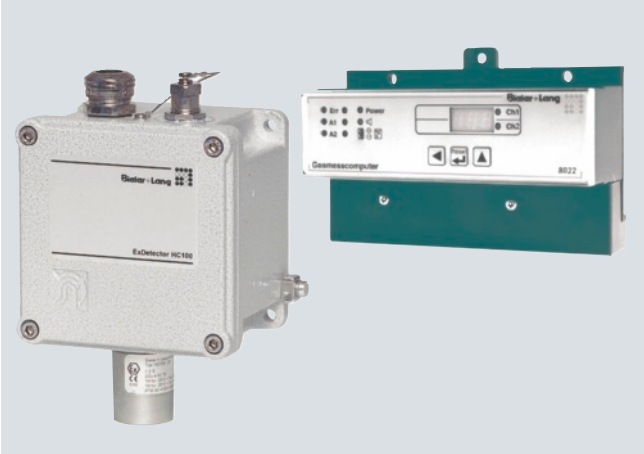

ExDetector HC 100-M sensor and 8022 evaluation electronics

Application

Safety equipment and protective measures for dangerous gases and vapors are becoming increasingly important. Increasing awareness of this problem together with more exact research and knowledge of the dangers which may occur when using these materials are some of the reasons for this development. Two features are especially important for objective estimation of the danger:

- Flammability of the gas or vapor when mixed with air
- Danger to health (toxicity) of the gases and vapors.

Sensor for monitoring the "Lower explosive limit" (LEL)

Flammable gases and vapors are explosive when mixed with air within a specific concentration range. This range is different for each gas, and is defined by the characteristic values of the lower explosive limit (LEL) and the upper explosive limit (UEL). These values are specified in vol.% according to the percentage of the respective gas in the air.

There are 2 types of sensor for monitoring the lower explosive limit (LEL). These are the ExDetector HC 150 sensor and the ExDetector HC 100-M sensor. These have the following features:

ExDetector HC 150

- Measurable gases: explosive gases and vapors in air
- Measuring range: 0 to 100 % LEL
- Measuring principle: catalytic combustion (heat tone)
- Output signal: 4 to 20 mA linear
- One-man calibration
- Wall mounting
- Use in hazardous areas of Zone 2 and in non-hazardous areas
- ATEX marking: II 3G Ex nA de IIC T4

ExDetector HC 100-M

- Measurable gases: explosive gases and vapors in air
- Measuring range: 0 to 100 % LEL
- Measuring principle: catalytic combustion (heat tone)
- Output signal: 4 to 20 mA linear
- One-man calibration
- Wall mounting
- Use in hazardous areas of Zones 1 and 2
- ATEX marking: II 2G EEx de [ib] IIC T6

Design

A gas warning system comprises at least:

- Sensor (ExDetector)
- Evaluation instrument
- Corresponding peripheral equipment such as:
  - Valves
  - Fan
  - Warning lamps
  - Signal horn

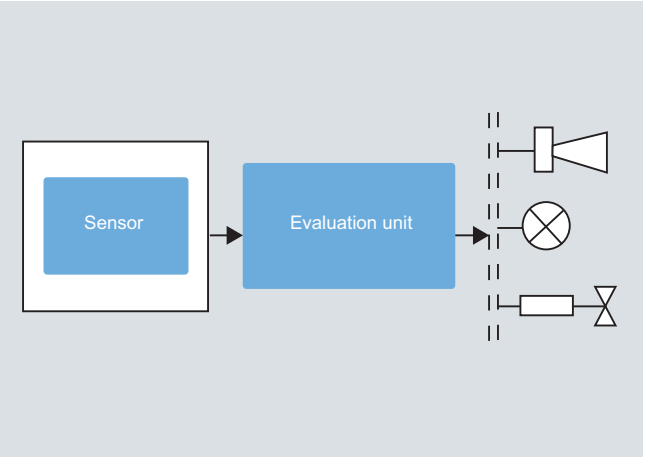

Gas warning system, basic design

Technical specifications

Sensor	ExDetector HC 150 sensor	ExDetector HC 100-M sensor
Field of application	Hazardous areas Zone 2 and non-hazardous areas	Hazardous areas Zones 1 and 2
Measurable gases	Flammable gases and vapors (natural gas, ethane, propane, hydrogen, butane, ethene etc.)	
Measuring range	0 … 100 % LEL	
Measuring principle	Catalytic combustion (heat of reaction)	
Output signal	4 ... 20 mA	
Response time (T90 time)	Dependent on sample gas (typical < 30 s)	
Max. distance from evaluation unit	1 000 m	
Connection cable	3 active cores, shielded, preferably H05VVC4V5-K	
Permissible ambient temperature	-20 ... +55 °C	
Permissible atmospheric pressure	800 ... 1 100 hPa	
Permissible humidity	20 … 90 % rel. humidity	
Materials	Stainless steel (sensor) and aluminum (enclosure)	
Power supply	24 V DC, from the evaluation unit	
Current consumption	Max. 80 mA	Max. 100 mA
Dimensions (H x W x D)	150 x 206 x 75 mm	Approx. 170 x 110 x 85 mm
Degree of protection of enclosure acc. to EN 60529	IP54	
Explosion protection	II 3G Ex nA de IIC T4 in accordance with EC Type-Test Certificate: PTB 10 ATEX 1023 Front of sensor: II 2G EEx d IIC T4 for -20 °C < TA < +80 °C T6 for -20 °C < TA < +55 °C in accordance with PTB 00 ATEX 1076U	Enclosure/electronics: II 2G EEx de [ib] IIC T6 in accordance with EC Type-Test Certificate: PTB 00 ATEX 1075 Front of sensor: II 2G EEx d IIC T4 for -20 °C < TA < +80 °C T6 for -20 °C < TA < +55 °C in accordance with PTB 00 ATEX 1076U Measuring function: In accordance with BAM 03 ATEX 0003 X
Flame arrester	–	Sintered metal
Suitable evaluation unit	Type 8022	
Weight	Approx. 0.6 kg	Approx. 1.3 kg

Notes on service life:

The average service life to be expected for a heat-tone sensor is more than 3 years. The sensor should be replaced in time.

The service life for a heat-tone sensor is shortened by catalyst poisons. The poisonous substances include sulfur, phosphorus, silicone and lead compounds. Contact with corrosive substances containing fluorine or chlorine compounds or substances which may release these due to reactions on the sensor element must be avoided since the service life could then be significantly reduced.

Sensors for explosive gases and vapors

Selection and ordering Data

	Order No.
Sensor for monitoring the lower explosive limit (LEL)	
Type ExDetector HC 150 for Ex Zone 2 and for non-hazardous areas with initial adjustment by the manufacturer to the type of gas listed below	
• Hydrogen (H_2)	**7MB1 943-6EA18-0A**
• Methane (CH_4)	**7MB1 943-6EA18-0B**
• Ethane (C_2H_6)	**7MB1 943-6EA18-0C**
• Propane (C_3H_8)	**7MB1 943-6EA18-0D**
• Butane (C_4H_{10})	**7MB1 943-6EA18-0E**
• n-Pentane (C_5H_{12})	**7MB1 943-6EA18-0F**
• n-Hexane (C_6H_{14})	**7MB1 943-6EA18-0G**
• n-Heptane (C_7H_{16})	**7MB1 943-6EA18-0H**
• Ethene (ethylene, C_2H_4)	**7MB1 943-6EA18-0J**
• Ethine (acetylene, C_2H_2)	**7MB1 943-6EA18-0K**
• Other type of gas (specify in the order)	**7MB1 943-6EA18-0L**
Type ExDetector HC 100-M for hazardous areas of Zones 1 and 2 with initial adjustment by the manufacturer to the type of gas listed below	
• Hydrogen (H_2)	**7MB1 943-6EA16-0A**
• Methane (CH_4)	**7MB1 943-6EA16-0B**
• Ethane (C_2H_6)	**7MB1 943-6EA16-0C**
• Propane (C_3H_8)	**7MB1 943-6EA16-0D**
• Butane (C_4H_{10})	**7MB1 943-6EA16-0E**
• n-Pentane (C_5H_{12})	**7MB1 943-6EA16-0F**
• n-Hexane (C_6H_{14})	**7MB1 943-6EA16-0G**
• n-Heptane (C_7H_{16})	**7MB1 943-6EA16-0H**
• Ethene (ethylene, C_2H_4)	**7MB1 943-6EA16-0J**
• Ethine (acetylene, C_2H_2)	**7MB1 943-6EA16-0K**
• Other type of gas (specify in the order)	**7MB1 943-6EA16-0L**
Calibrationbox-i (only for ExDetector HC 100-M) Hand-held unit for calibration, approved for hazardous areas Zone 1 and Zone 2	**7MB1 943-6EA17**
Calibration gas set and calibration gas cylinders	See "Gas measuring and warning systems/Sensors for monitoring threshold limit values"

Application

A recommended value for the alarm thresholds of gas warning systems is the TLV (threshold limit value). The TLV is the maximum permissible concentration of gas, vapor or suspended material in air at the workplace that, according to current knowledge, will not influence the health of employees or cause unreasonable irritation even in the event of repeated and long-term exposure, usually 8 hours per day, but under observation of an average 40-hour working week (with single-shift working).

Design

There are 2 types of sensor available for monitoring the threshold limit values of toxic gases and vapors, as well as an oxygen deficiency: the gas monitor TOX and the Ex-monitor TOX. These have the following features:

Gas monitor TOX

- Measurable gases: O_2, CO, H_2S, Cl_2, H_2, HCN, SO_2, NO, NO_2; further sensors for toxic gases on request
- Measuring range: depends on type of gas (see Ordering data)
- Measuring principle: electrochemical measuring cell
- Output signal 4 to 20 mA
- One-man calibration
- 2-wire system

Ex-monitor TOX

- Technical data as for gas monitor TOX, but for use in Ex Zones 1 and 2
- Explosion-proof, II 2G EEx ia IIC T4
- Concentration display

Dimensional drawings

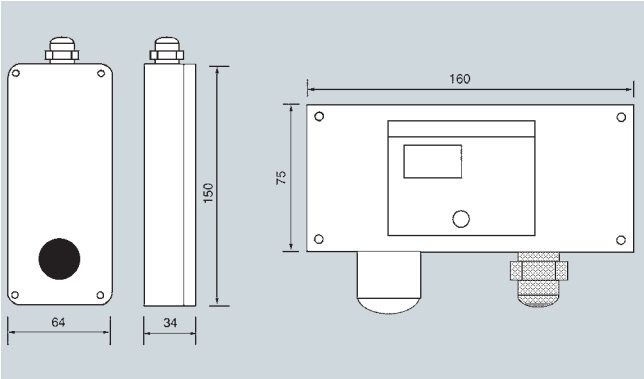

Gas monitor TOX (left) and Ex-monitor TOX (right)

Technical specifications

Sensor	Gas monitor TOX	Ex-monitor TOX
Field of application	Non-hazardous areas	Hazardous areas of Zones 1 and 2
Measurable gases	Toxic gases and vapors (see ordering data)	
Measuring range	See ordering data	
Measuring principle	Electrochemical measuring cell	
Output signal	4 ... 20 mA	
Max. distance from evaluation unit	1 000 m	
Connection cable	2-core, shielded, max. line resistance 100 Ω/core	
Recommended barriers	–	Transmitter power supply
Permissible ambient temperature	-10 ... +50 °C	
Permissible atmospheric pressure	900 ... 1 100 mbar	
Influence of atmospheric pressure	< 0.02 % of signal/mbar	
Permissible humidity	15 ... 90 % rel. humidity	
Enclosure material	Aluminum	Glass fiber-reinforced polyester
Dimensions (H x W x D)	170 x 64 x 34 mm	115 x 160 x 75 mm
Degree of protection acc. to EN 60529	IP54	
Power supply	24 V DC, from the evaluation unit or from emergency power supply (option)	
Current consumption	Max. 100 mA	
Explosion protection	–	II 2G EEx ia IIC T4 in accordance with EC Type-Test Certificate BVS 03 ATEX E 384
Suitable evaluation unit	Type 8022	
Weight	Approx. 0.4 kg	Approx. 1.2 kg

Selection and ordering Data

Sensor	Measuring range	Type of gas	Order No.
Gas monitor TOX O_2-25	0 ... 25 vol.%	Oxygen	**7MB1 943-6EA00**
Gas monitor TOX CO-1 000	0 ... 300 ppm	Carbon monoxide	**7MB1 943-6EA01**
Gas monitor TOX H_2S-50	0 ... 50 ppm	Hydrogen sulfide	**7MB1 943-6EA02**
Gas monitor TOX H_2S-200	0 ... 100 ppm	Hydrogen sulfide	**7MB1 943-6EA03**
Gas monitor TOX Cl_2-20	0 ... 10 ppm	Chlorine	**7MB1 943-6EA04**
Gas monitor TOX H_2-1 000	0 ... 1 000 ppm	Hydrogen	**7MB1 943-6EA05**
Gas monitor TOX HCN-100	0 ... 100 ppm	Hydrogen cyanide	**7MB1 943-6EA06**
Gas monitor TOX SO_2-20	0 ... 20 ppm	Sulfur dioxide	**7MB1 943-6EA07**
Gas monitor TOX SO_2-100	0 ... 100 ppm	Sulfur dioxide	**7MB1 943-6EA08**
Gas monitor TOX NO-100	0 ... 100 ppm	Nitrogen monoxide	**7MB1 943-6EA13**
Gas monitor TOX NO-20	0 ... 20 ppm	Nitrogen monoxide	**7MB1 943-6EA11**
Gas monitor TOX NH_3-200	0 ... 200 ppm	Ammonia	**7MB1 943-6EA12**
Ex-monitor TOX O_2-25	0 ... 25 vol.%	Oxygen	**7MB1 943-6EB00**
Ex-monitor TOX CO-1 000	0 ... 300 ppm	Carbon monoxide	**7MB1 943-6EB01**
Ex-monitor TOX H_2S-50	0 ... 50 ppm	Hydrogen sulfide	**7MB1 943-6EB02**
Ex-monitor TOX H_2S-100	0 ... 100 ppm	Hydrogen sulfide	**7MB1 943-6EB03**
Ex-monitor TOX Cl_2-20	0 ... 20 ppm	Chlorine	**7MB1 943-6EB04**
Ex-monitor TOX H_2-1 000	0 ... 1 000 ppm	Hydrogen	**7MB1 943-6EB05**
Ex-monitor TOX HCN-100	0 ... 100 ppm	Hydrogen cyanide	**7MB1 943-6EB06**
Ex-monitor TOX SO_2-20	0 ... 20 ppm	Sulfur dioxide	**7MB1 943-6EB07**
Ex-monitor TOX SO_2-100	0 ... 100 ppm	Sulfur dioxide	**7MB1 943-6EB08**
Ex-monitor TOX NO-100	0 ... 100 ppm	Nitrogen monoxide	**7MB1 943-6EB10**
Ex-monitor TOX NO-20	0 ... 20 ppm	Nitrogen monoxide	**7MB1 943-6EB11**
Ex-monitor TOX NH_3-200	0 ... 200 ppm	Ammonia	**7MB1 943-6EB12**

5

Note:
All sensors for toxic gases are factory-set. Supply of toxic calibration gases (SO_2, H_2S, HCN) for calibration is only possible within Germany.

Calibration gases

	Order No.
Test gas set in aluminium case Comprising: • 1 aluminum case • 1 governor (check valve, flowmeter) • 1 hose • 1 pneumatic coupling • 1 cable for front panel measuring sockets • Space for 2 MINICAN calibration gas cylinders (order separately)	**7MB1 943-6EC01**
Calibration gas cylinders made of aluminum	
MINICAN calibration gas cylinder O_2 Non-returnable bottle with a geometric capacity of 1 liter; filling: Gas mixture comprising 20 vol.% O_2 as the measured component and 80 % synthetic air	**7MB1 943-6EC02**
MINICAN calibration gas cylinder CO Non-returnable bottle with a geometric capacity of 1 liter; filling: Gas mixture comprising 300 ppm CO as the measured component in nitrogen	**7MB1 943-6EC03**
MINICAN calibration gas cylinder H_2 Non-returnable bottle with a geometric capacity of 1 liter; filling: Gas mixture comprising 1.6 vol.% H_2 as the measured component, corresponding to 40 % LEL, in nitrogen	**7MB1 943-6EC04**

	Order No.
MINICAN calibration gas cylinder CH_4 Non-returnable bottle with a geometric capacity of 1 liter; filling: Gas mixture comprising 1.76 vol.% CH_4 as the measured component, corresponding to 40 % LEL, in nitrogen	**7MB1 943-6EC05**
MINICAN calibration gas cylinder C_3H_8 Non-returnable bottle with a geometric capacity of 1 liter; filling: Gas mixture comprising 0.68 vol.% C_3H_8 as the measured component, corresponding to 48 % LEL, in nitrogen	**7MB1 943-6EC06**
MINICAN calibration gas cylinder C_4H_{10} Non-returnable bottle with a geometric capacity of 1 liter; filling: Gas mixture comprising 0.56 vol.% C_4H_{10} as the measured component, corresponding to 40 % LEL, in nitrogen	**7MB1 943-6EC07**
MINICAN calibration gas cylinder NH_3 Non-returnable bottle with a geometric capacity of 1 liter; filling: Gas mixture comprising 500 ppm NH_3 as the measured component in nitrogen	**7MB1 943-6EC08**
Other calibration gases, e.g. SO_2, H_2S, NO, NO_2, HCN	Upon request (toxic calibration gases are only available within Germany)

Application

The evaluation unit, when used together with sensors with a 4 to 20 mA mA signal output, has the following functions:

- Measurement and display of gas concentration
- Monitoring and warning of presence of these gases
- Initiation of protective measures to counteract an increase in the concentration.

The evaluation unit provides the operating voltage for the sensors and compares the sensor signal with the individual alarm thresholds. If the concentration rises above the set alarm threshold, this is visually indicated by lighting-up of the corresponding LED, and the associated relay contact is activated. The 8022 evaluation unit must not be installed in the hazardous area.

Technical specifications

Evaluation unit	
Number of connectable sensors	2
Type of sensor	All sensors with output signal 4 ... 20 mA
Number of alarm thresholds	2 alarm stages adjustable for each sensor
Outputs (relay)	• Alarm 1, non-latching (NC contact) • Alarm 2, optionally latching (changeover contact) • Horn (NC contact) • Fault (NO contact)
Output for recorder	0 ... 5 V, on front panel
Relay rating	230 V AC / 24 V DC; 2 A
Displays	
• LEDs	For operational readiness, alarm 1 and 2, horn and fault for each sensor
• Digital display	For concentration, guidance through the menus and display of programming data
Control elements	3 buttons for • Horn and alarm reset • Guidance through menus • Programming
Warm-up period	30 min
Operating temperature	0 ... 55 °C
EC-Type Examination according to directive 94/9/EC	BVS 03 ATEX G 007 X
Enclosure	
• Material	Plastic
• Degree of protection acc. to EN 60529	IP30 or IP54 if installed in miniature field distributor (see Ordering data)
• Assembly	Wall mounting or rail mounting (35 mm) with transparent pane and terminal cover
Electric connection	21-pin screw terminal
Power supply	210 ... 250 V AC, 50/60 Hz, 20 VA 21.7 ... 28 V DC, 14 W or 110 V AC, 60 Hz, 20 VA 21.7 ... 28 V DC, 14 W
Weight	Approx. 0.75 kg

Emergency power supply with charger	
Charger	
• Design	For mounting on a 35-mm rail (DIN), e.g. in miniature field distributors
• Degree of protection acc. to EN 60529	IP20
• Dimensions (H x W x D) in mm	96 x 105 x 56
• Weight	Approx. 0.4 kg
Rechargeable battery	
• Rated voltage	12 V
• Capacity	2.2 Ah
• Dimensions (H x W x D) in mm	66 x 177 x 34
• Weight	Approx. 0.8 kg

Miniature field distributor	
Degree of protection acc. to EN 60529	IP54
Dimensions (H x W x D) in mm	
• Type KFV1	180 x 254 x 110
• Type KFV2	360 x 254 x 110

Selection and ordering Data

	Order No.
8022 evaluation unit With enclosure for wall mounting or for 35-mm rail mounting	
• Power supply 230 V AC /24 V DC	**7MB1 943-6EA30**
• Power supply 110 V AC /24 V DC	**7MB1 943-6EA35**

Accessories

	Order No.
Emergency power supply with charger type NV 24 Device for supply of 8022 evaluation unit with 24 V DC emergency power, with low-voltage check, comprising charger and 2 batteries 12 V/2.2 Ah	
• Power supply 230 V AC	**7MB1 943-6EA40**
• Power supply 110 V AC	**7MB1 943-6EA45**
Spare battery[1)] Rated voltage 12 V, capacity 2.2 Ah, dimensions (H x L x W) in mm: 66 x 177 x 34	**7MB1 943-6EA60**
Miniature field distributor KFV1 To accommodate an 8022 evaluation unit, incl. installation and wiring	**7MB1 943-6EA50**
Miniature field distributor KFV2 To accommodate 2 evaluation units 8022, incl. installation and wiring	**7MB1 943-6EA55**
Signal horn IP55 For indoor and outdoor installation, with acoustic horn, approx. 108 dB (A), with impact-proof, thermoplastic (ABS) housing, gray	
• Power supply 230 V AC, 50 Hz, 0.1 A	**7MB1 943-6EA65**
• Power supply 24 V DC, 0.45 A	**7MB1 943-6EA66**

8022 evaluation unit and accessories

	Order No.
Flasher lamp IP54 Optical signal transmitter for indoor or protected outdoor installation, with impact-proof, thermoplastic (ABS) housing, gray, with red Perspex calotte, flash energy 5 joules	
• Power supply 230 V AC, 50 Hz, 0.09 A	**7MB1 943-6EA67**
• Power supply 24 V DC, 0.35 A	**7MB1 943-6EA68**
EEx signal horn IP66 For indoor or outdoor installation, degree of protection IP66 to IEC 529, without acoustic horn, approx. 105 dB (A), 1 m, type of explosion protection II 2G EEx de IIC T6, PTB approval PTB 01 ATEX 1063 Housing: bottom part made of glass-fiber-reinforced polyester, top part made of Macrolon, temperature range -20 ... +40 °C, weight 3.5 kg	
• Power supply 230 V AC, 50 Hz, 0.07 A	**7MB1 943-6EA74**
• Power supply 24 V DC, 0.3 A	**7MB1 943-6EA75**
EEx flasher lamp IP66 Visual warning and signal equipment for use in hazardous areas (Zones 1 and 2), degree of protection IP66 to IEC 529, flash energy 15 joules, type of explosion protection II 2G EEx de IIC T6, PTB approval PTB 02 ATEX 1008 Housing: bottom part made of glass-fiber-reinforced polyester, top part made of Macrolon, temperature range -20 ... +40 °C, weight 3.5 kg	
• Power supply 230 V AC, 50 Hz, 0.2 A	**7MB1 943-6EA76**
• Power supply 24 V DC, 1 A	**7MB1 943-6EA77**

1) Two batteries are required for the emergency power supply. Max. 2.2 Ah permissible when installed in miniature field distributor. Batteries with capacity up to max. 38 Ah on request.

Dimensional drawings

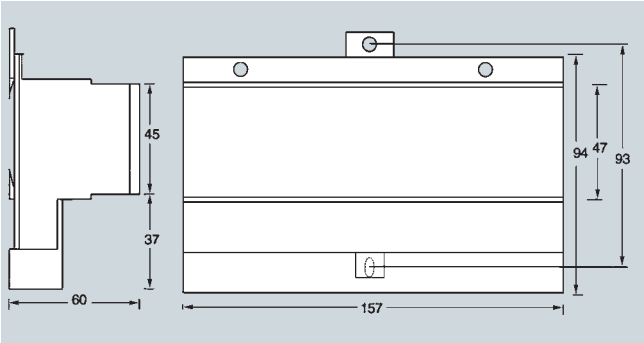

8022 evaluation unit

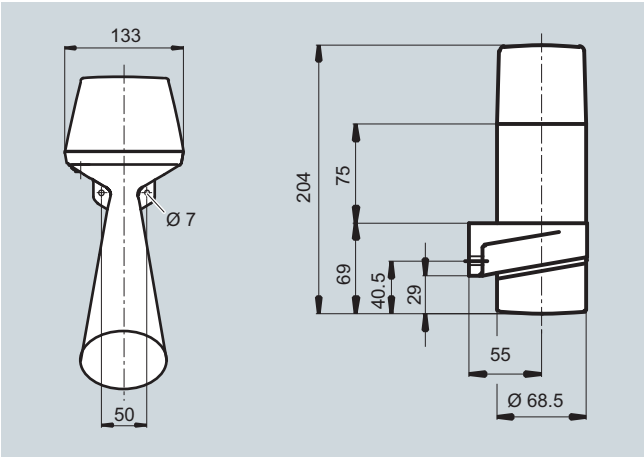

Signal horn IP55 (left) and flasher lamp IP54 (right)

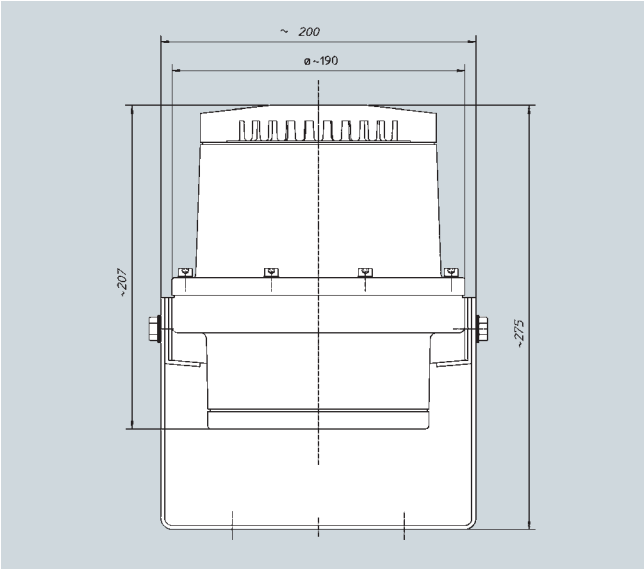

EEx signal horn IP66

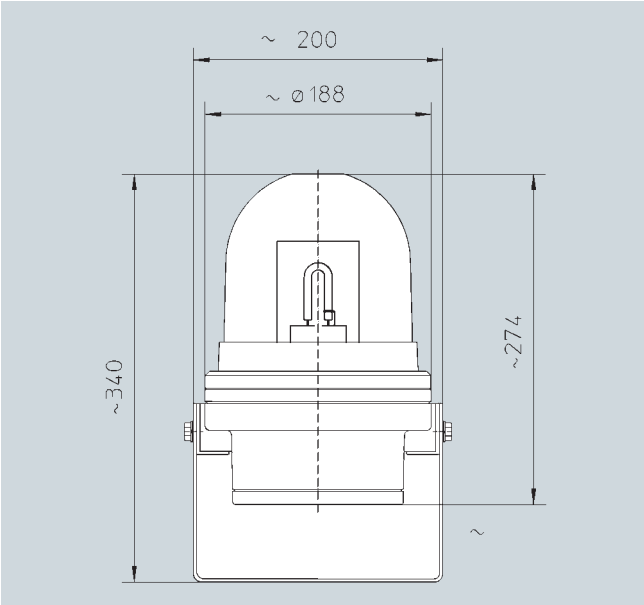

EEx flasher lamp IP66

Schematics

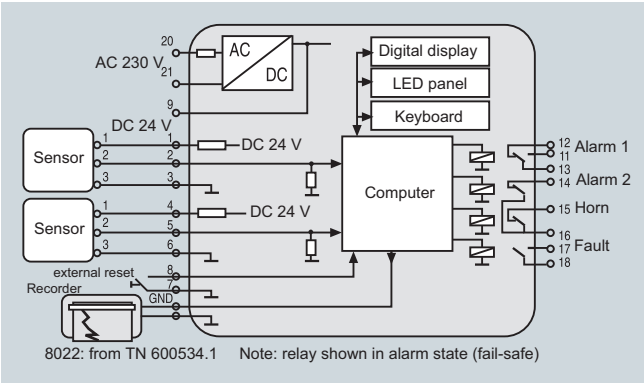

8022 evaluation unit, function diagram

Notes

Appendix

6

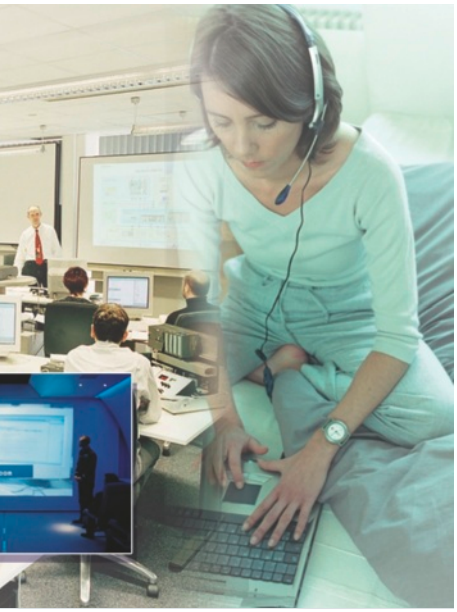

6/2	**Systems for process analysis**
6/3	**Training**
6/4	**Partner at Industry Automation and Drive Technologies**
6/5	**Online Services**
6/5	Information and Ordering in the Internet and on DVD
6/6	Social Media Mobile Media
6/7	**Siemens Industry Online Support**
6/7	The unmatched complete service for the entire life cycle
6/10	**Subject index**
6/11	**Order Nr. index**
6/14	**Conditions of sale and delivery**

Overview

The reliability of the analytical equipment plays an important role for product quality, productivity and plant availability in all process industries. Environmental protection also makes high demands on the quality of the analytical equipment. Siemens has been a reliable partner in the construction of analyzer systems for over 30 years. We supply tailored and turnkey systems for your measurement task, and accompany you through consulting and project planning, up to far beyond delivery and commissioning.

Everything under one umbrella, from one source

Industry focus

Cement, Chemicals, Metals, Oil and Gas, Power

Range of services

- Competent and professional consulting by experienced analytical specialists
- Support during authorization procedures
- Basic and detailed engineering with state-of-the-art software tools (AutoCAD / ECS-CAD)
- System assembly in Karlsruhe (Germany), Houston (US) and Singapore on more than 1 000 m^2 workshop area each
- On-site assembly
- Worldwide commissioning by analytical specialists
- Servicing, spare parts
- Customer training
- Process-oriented organization

Faster and more applicable know-how: Hands-on training from the manufacturer

SITRAIN® – Training for Industry – provides you with comprehensive support in solving your tasks.

Training by the market leader in the industry enables you to make independent decisions with confidence. Especially where the optimum and efficient use of products and plants are concerned. You can eliminate deficiencies in existing plants, and exclude expensive faulty planning right from the beginning.

First-class know-how directly pays for itself: In shorter startup times, high-quality end products, faster troubleshooting and reduced downtimes. In other words, increased profits and lower costs.

Achieve more with SITRAIN

- Shorter times for startup, maintenance and servicing
- Optimized production operations
- Reliable configuration and startup
- Minimization of plant downtimes
- Flexible plant adaptation to market requirements
- Compliance with quality standards in production
- Increased employee satisfaction and motivation
- Shorter familiarization times following changes in technology and staff

Contact

Visit our site on the Internet at:

http://www.siemens.com/sitrain

or let us advise you personally.

SITRAIN Customer Support Germany:

Phone: +49 (911) 895-7575

Fax: +49 (911) 895-7576

E-Mail: info@sitrain.com

SITRAIN highlights

Top trainers

Our trainers are skilled teachers with direct practical experience. Course developers have close contact with product development, and directly pass on their knowledge to the trainers.

Practical experience

The practical experience of our trainers enables them to teach theory effectively. But since theory can be pretty drab, we attach great importance to practical exercises which can comprise up to half of of the course time. You can therefore immediately implement your new knowledge in practice. We train you on state-of-the-art methodically/didactically designed training equipment. This training approach will give you all the confidence you need.

Wide variety

With a total of about 300 local attendance courses, we train the complete range of Siemens Industry products as well as interaction of the products in systems.

Tailor-made training

We are only a short distance away. You can find us at more than 50 locations in Germany, and in 62 countries worldwide. You wish to have individual training instead of one of our 300 courses? Our solution: We will provide a program tailored exactly to your personal requirements. Training can be carried out in our Training Centers or at your company.

The right mixture: Blended learning

"Blended learning" is a combination of various training media and sequences. For example, a local attendance course in a Training Center can be optimally supplemented by a teach-yourself program as preparation or follow-up. Additional effect: Reduced traveling costs and periods of absence.

Partners at Industry Automation and Drive Technologies

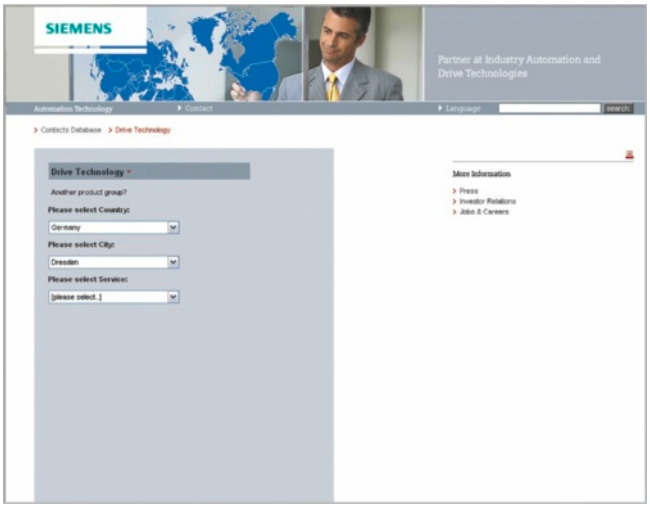

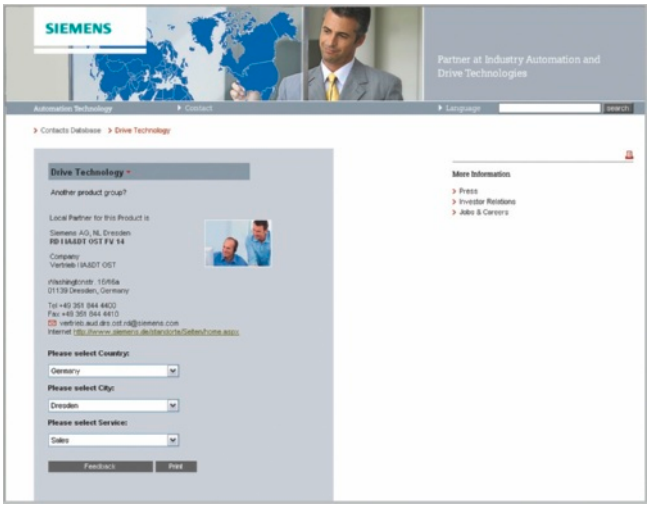

At Siemens Industry Automation and Drive Technologies, more than 85 000 people are resolutely pursuing the same goal: long-term improvement of your competitive ability. We are committed to this goal. Thanks to our commitment, we continue to set new standards in automation and drive technology. In all industries – worldwide.

At your service locally, around the globe for consulting, sales, training, service, support, spare parts ... on the entire Industry Automation and Drive Technologies range.

Your personal contact can be found in our Contacts Database at: www.siemens.com/automation/partner

You start by selecting a

- Product group,
- Country,
- City,
- Service.

Siemens Industry Automation and Drive Technologies in the WWW

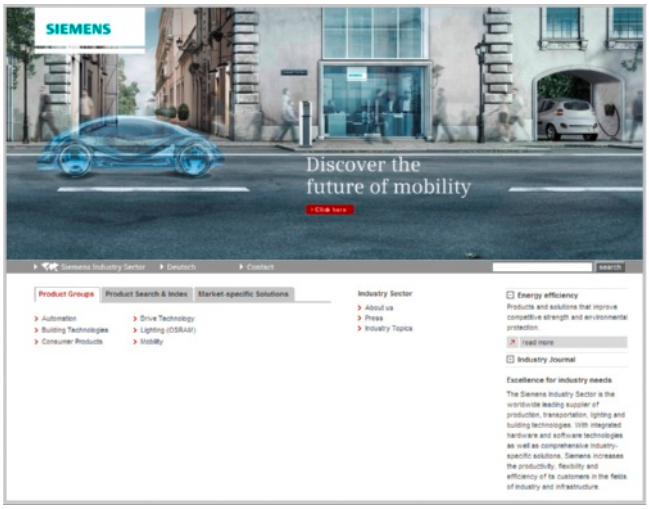

A detailed knowledge of the range of products and services available is essential when planning and configuring automation systems. It goes without saying that this information must always be fully up-to-date.

Siemens Industry Automation and Drive Technologies has therefore built up a comprehensive range of information in the World Wide Web, which offers quick and easy access to all data required.

Under the address

www.siemens.com/industry

you will find everything you need to know about products, systems and services.

Product Selection Using the Interactive Catalog CA 01 of Industry

Detailed information together with convenient interactive functions:
The interactive catalog CA 01 covers more than 80 000 products and thus provides a full summary of the Siemens Industry Automation and Drive Technologies product base.

Here you will find everything that you need to solve tasks in the fields of automation, switchgear, installation and drives.
All information is linked into a user interface which is easy to work with and intuitive.

After selecting the product of your choice you can order at the press of a button, by fax or by online link.

Information on the interactive catalog CA 01 can be found in the Internet under

www.siemens.com/automation/ca01

or on DVD.

Easy Shopping with the Industry Mall

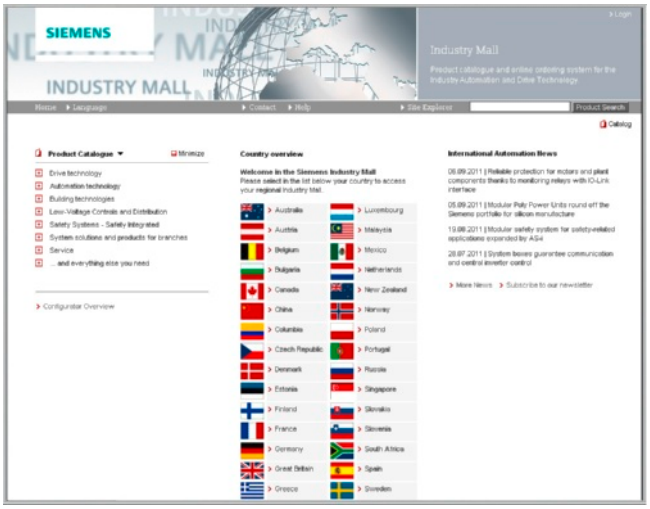

The Industry Mall is the virtual department store of Siemens AG in the Internet. Here you have access to a huge range of products presented in electronic catalogs in an informative and attractive way.

Data transfer via EDIFACT allows the whole procedure from selection through ordering to tracking of the order to be carried out online via the Internet.

Numerous functions are available to support you.

For example, powerful search functions make it easy to find the required products, which can be immediately checked for availability. Customer-specific discounts and preparation of quotes can be carried out online as well as order tracking and tracing.

Please visit the Industry Mall on the Internet under:

www.siemens.com/industrymall

Social Media

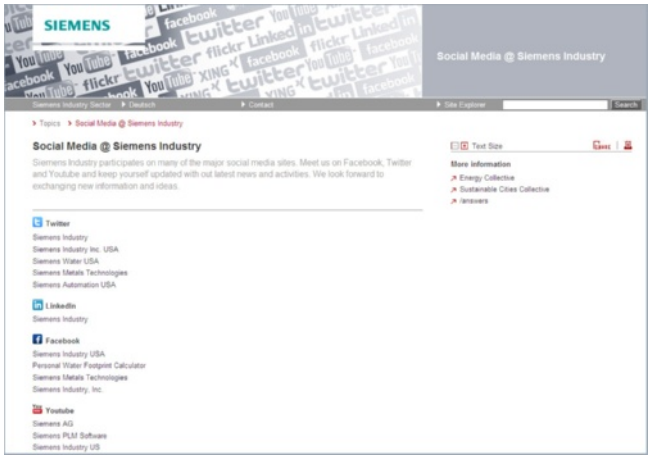

Connect with Siemens through social media: visit our social networking sites for a wealth of useful information, demos on products and services, the opportunity to provide feedback, to exchange information and ideas with customers and other Siemens employees, and much, much more. Stay in the know and follow us on the ever-expanding global network of social media.

Connect with Siemens Industry at our central access point:

www.siemens.com/industry/socialmedia

Or via our product pages at:

www.siemens.com/automation

or

www.siemens.com/drives

To find out more about Siemens' current social media activities visit us at:

www.siemens.com/socialmedia

Mobile Media

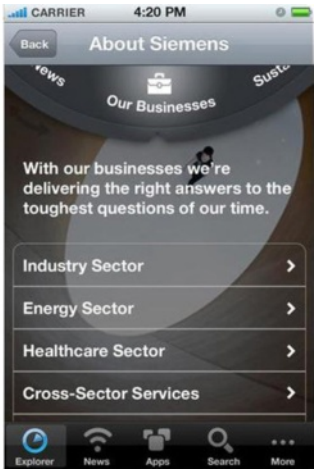

We are also constantly expanding our offering of cross-platform apps for smartphones and tablets. You will find the current Siemens apps at your app store.

Unmatched complete service for the entire life cycle

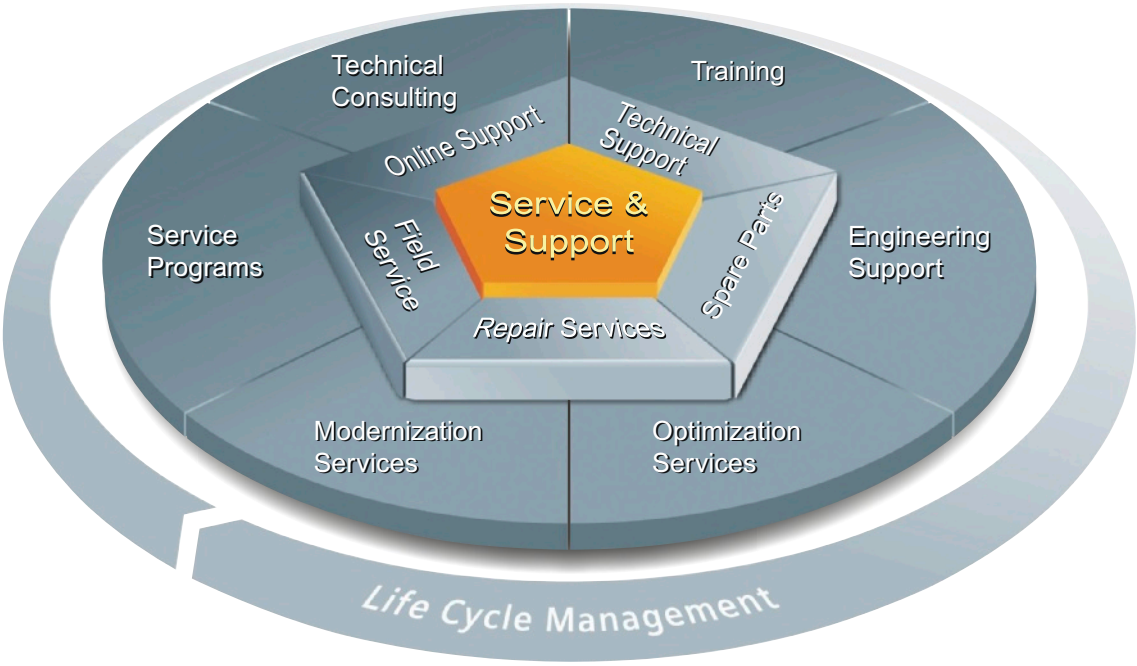

For machine constructors, solution providers and plant operators: The service offering from Siemens Industry, Automation and Drive Technologies includes comprehensive services for a wide range of different users in all sectors of the manufacturing and process industry

To accompany our products and systems, we offer integrated and structured services that provide valuable support in every phase of the life cycle of your machine or plant - from planning and implementation through commissioning as far as maintenance and modernization.

Our Service & Support accompanies you worldwide in all matters concerning automation and drives from Siemens. We provide direct on-site support in more than 100 countries through all phases of the life cycle of your machines and plants.

You have an experienced team of specialists at your side to provide active support and bundled know-how. Regular training courses and intensive contact among our employees - even across continents - ensure reliable service in the most diverse areas.

Online Support

The comprehensive online information platform supports you in all aspects of our Service & Support at any time and from any location in the world.

www.siemens.com/automation/service&support

Technical Consulting

Support in planning and designing your project: From detailed actual-state analysis, definition of the goal and consulting on product and system questions right through to the creation of the automation solution.

Technical Support

Expert advice on technical questions with a wide range of demand-optimized services for all our products and systems.

www.siemens.com/automation/support-request

Training

Extend your competitive edge - through practical know-how directly from the manufacturer.

www.siemens.com/sitrain

Contact information is available in the Internet at:
www.siemens.com/automation/partner

Siemens Industry Online Support

Unmatched complete service for the entire life cycle

Engineering Support

Support during project engineering and development with services fine-tuned to your requirements, from configuration through to implementation of an automation project.

Field Service

Our Field Service offers you services for commissioning and maintenance - to ensure that your machines and plants are always available.

Spare parts

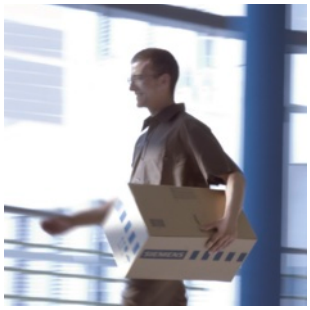

In every sector worldwide, plants and systems are required to operate with constantly increasing reliability. We will provide you with the support you need to prevent a standstill from occurring in the first place: with a worldwide network and optimum logistics chains.

Repairs

Downtimes cause problems in the plant as well as unnecessary costs. We can help you to reduce both to a minimum - with our worldwide repair facilities.

Optimization

During the service life of machines and plants, there is often a great potential for increasing productivity or reducing costs. To help you achieve this potential, we are offering a complete range of optimization services.

Modernization

You can also rely on our support when it comes to modernization - with comprehensive services from the planning phase all the way to commissioning.

Service programs

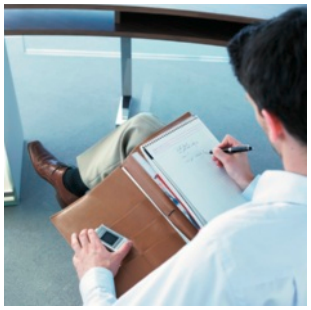

Our service programs are selected service packages for an automation and drives system or product group. The individual services are coordinated with each over to ensure smooth coverage of the entire life cycle and support optimum use of your products and systems.

The services of a Service Program can be flexibly adapted at any time and used separately.

Examples of service programs:

- Service contracts
- Plant IT Security Services
- Life Cycle Services for Drive Engineering
- SIMATIC PCS 7 Life Cycle Services
- SINUMERIK Manufacturing Excellence
- SIMATIC Remote Support Services

Advantages at a glance:

- Reduced downtimes for increased productivity
- Optimized maintenance costs due to a tailored scope of services
- Costs that can be calculated and therefore planned
- Service reliability due to guaranteed response times and spare part delivery times
- Customer service personnel will be supported and relieved of additional tasks
- Comprehensive service from a single source, fewer interfaces and greater expertise

Contact information is available in the Internet at:
www.siemens.com/automation/partner

Knowledge Base on DVD

For locations without online connections to the Internet there are excerpts of the free part of the information sources available on DVD (Service & Support Knowledge Base). This DVD contains all the latest product information at the time of production (FAQs, Downloads, Tips and Tricks, Updates) as well as general information on Service & Support.

The DVD also includes a full-text search and our Knowledge Manager for targeted searches for solutions. The DVD will be updated every 4 months.

Just the same as our online offer in the Internet, the Service & Support Knowledge Base on DVD comes complete in 5 languages (German, English, French, Italian, Spanish).

You can order the **Service & Support Knowledge Base** DVD from your Siemens contact.

Order no. **6ZB5310-0EP30-0BA2**

Automation Value Card

Small card - great support

The Automation Value Card is an integral component of the comprehensive service concept with which Siemens Drive Automation and Drive Technologies will accompany you in each phase of your automation project.

It doesn't matter whether you want just specific services from our Technical Support or want to purchase something on our Online portal, you can always pay with your Automation Value Card. No invoicing, transparent and safe. With your personal card number and associated PIN you can view the state of your account and all transactions at any time.

Services on card. This is how it's done.

Card number and PIN are on the back of the Automation Value Card. When delivered, the PIN is covered by a scratch field, guaranteeing that the full credit is on the card.

By entering the card number and PIN you have full access to the Service & Support services being offered. The charge for the services procured is debited from the credits on your Automation Value Card.

All the services offered are marked in currency-neutral credits, so you can use the Automation Value Card worldwide.

Order your Automation and Value Card easily and comfortably like a product with your sales contact.

Automation Value Card order numbers	
Credits	Order no.
200	**6ES7 997-0BA00-0XA0**
500	**6ES7 997-0BB00-0XA0**
1 000	**6ES7 997-0BC00-0XA0**
10 000	**6ES7 997-0BG00-0XA0**

Detailed information on the services offered is available on our Internet site at:

www.siemens.com/automation/service&support

Service & Support à la Card: Examples

Technical Support	
"Priority"	Priority processing for urgent cases
"24 h"	Availability round the clock
"Extended"	Technical consulting for complex questions
"Mature Products"	Consulting service for products that are not available any more
Support Tools in the Support Shop	
	Tools that can be used directly for configuration, analysis and testing

Subject index

C

Coalescence filter 4/3
Compressor gas coolers 4/17
Condensation removal 4/14
Condensation tank 4/14
Condensation trap 4/13
Control assemblies for shut-off ball valves 4/28

F

Filter with stainless steel enclosure 4/11
Filters 4/2
Fittings 4/48
Flowmeters 4/36
Front mounting filter 4/2

G

Gas coolers 4/17
Gas sampling probes 1/2
Gases 4/43

H

Heated sample gas lines 3/5
Hose pump for condensation removal 4/16

M

Measuring equipment 5/2
Moisture sensor and wiring modules 4/9
Multiway ball valves made of stainless steel 4/27

N

NO_2/NO converter 4/46

P

Particle and coalescence filter 4/5
Preliminary condensation tank 4/15
Pressure reducers 4/39
Pumps 2/10
Pure gases 4/44

R

Reference gas monitoring for OXYMAT gas analyzers 4/45
Room air filter 4/2

S

Sample gas line 3/5
Sample gas pumps 2/10
Shut-off and multiway ball valves made of PVDF 4/28
Shut-off ball valve for high temperatures 4/26
Shut-off ball valve for low temperatures 4/26
Solenoid valves 4/29

U

Universal filter 4/7

V

Valves 4/24

3RS1 ...

3RS1 042-1GW70 ..... 3/2, 3/3, 3/4

7MB1 940-...

7MB1 940-1FA00 ..... 4/24
7MB1 940-1HA01 ..... 4/30
7MB1 940-1NA00 ..... 4/45
7MB1 940-6AA01 ..... 1/8, 4/49
7MB1 940-6AA06 ..... 4/48
7MB1 940-6AA08 ..... 4/48
7MB1 940-6AB01 ..... 1/8, 4/26, 4/49
7MB1 940-6AC00 ..... 4/49
7MB1 940-6AF00 ..... 4/45, 4/49

7MB1 943-1..

7MB1 943-1EA01 ..... 1/2
7MB1 943-1EA02 ..... 1/2
7MB1 943-1MA01-1CB1 ..... 4/40
7MB1 943-1MA01-1EB1 ..... 4/40
7MB1 943-1MA01-3CB1 ..... 4/40
7MB1 943-1MB01-1CB1 ..... 4/40
7MB1 943-1MB01-3CB1 ..... 4/40
7MB1 943-1PA01-2AB6 ..... 4/39
7MB1 943-1PA01-2AC6 ..... 4/39
7MB1 943-1PB01-2AB3 ..... 4/39
7MB1 943-1PB01-2AB5 ..... 4/39
7MB1 943-1QA01-1AB2 ..... 4/41
7MB1 943-1QA01-1AB3 ..... 4/41
7MB1 943-1QA01-1AB5 ..... 4/41
7MB1 943-1QA01-1AB6 ..... 4/41
7MB1 943-1QA01-1AC2 ..... 4/41
7MB1 943-1QA01-1AC3 ..... 4/41
7MB1 943-1QA01-1AC5 ..... 4/41
7MB1 943-1QA01-1AC6 ..... 4/41
7MB1 943-1QA01-3AB2 ..... 4/41
7MB1 943-1QA01-3AB3 ..... 4/41
7MB1 943-1QA01-3AB5 ..... 4/41
7MB1 943-1QA01-3AB6 ..... 4/41
7MB1 943-1QA01-3AC3 ..... 4/41
7MB1 943-1QA01-3AC5 ..... 4/41
7MB1 943-1QA01-3AC6 ..... 4/41
7MB1 943-1QB01-1AB2 ..... 4/41
7MB1 943-1QB01-1AB3 ..... 4/41
7MB1 943-1QB01-1AB5 ..... 4/41
7MB1 943-1QB01-1AB6 ..... 4/41
7MB1 943-1QB01-1AC2 ..... 4/41
7MB1 943-1QB01-1AC3 ..... 4/41
7MB1 943-1QB01-1AC5 ..... 4/41
7MB1 943-1QB01-1AC6 ..... 4/41
7MB1 943-1QB01-3AB2 ..... 4/41
7MB1 943-1QB01-3AB3 ..... 4/41
7MB1 943-1QB01-3AB5 ..... 4/41
7MB1 943-1QB01-3AB6 ..... 4/41
7MB1 943-1QB01-3AC2 ..... 4/41
7MB1 943-1QB01-3AC3 ..... 4/41
7MB1 943-1QB01-3AC5 ..... 4/41
7MB1 943-1QB01-3AC6 ..... 4/41
7MB1 943-1RA01-4AB7 ..... 4/42
7MB1 943-1RA01-4AC7 ..... 4/42
7MB1 943-1RB01-4AB7 ..... 4/42
7MB1 943-1RB01-4AC7 ..... 4/42
7MB1 943-1TA01-1CB1 ..... 4/40
7MB1 943-1UA01-4AA2 ..... 4/42
7MB1 943-1UA01-4AA3 ..... 4/42
7MB1 943-1UA01-4AA4 ..... 4/42

7MB1 943-2..

7MB1 943-2AA01 ..... 3/3
7MB1 943-2AA02 ..... 3/3
7MB1 943-2AA14 ..... 3/5
7MB1 943-2AA41 ..... 4/15
7MB1 943-2AA44 ..... 4/15
7MB1 943-2AA45 ..... 4/15
7MB1 943-2AA46 ..... 4/15
7MB1 943-2AA47 ..... 4/15
7MB1 943-2AA48 ..... 4/15
7MB1 943-2AA50 ..... 4/15
7MB1 943-2AA65 ..... 4/14
7MB1 943-2AA66 ..... 4/14
7MB1 943-2AA74 ..... 3/4
7MB1 943-2AA75 ..... 3/4
7MB1 943-2AA76 ..... 3/4
7MB1 943-2AA77 ..... 3/4
7MB1 943-2AA80 ..... 3/5
7MB1 943-2AA81 ..... 3/5
7MB1 943-2AB10 ..... 3/2
7MB1 943-2AB12 ..... 3/2
7MB1 943-2AB13 ..... 3/2
7MB1 943-2AB14 ..... 3/2
7MB1 943-2AB16 ..... 3/2
7MB1 943-2AB20 ..... 3/2
7MB1 943-2AB22 ..... 3/2
7MB1 943-2AB24 ..... 3/2
7MB1 943-2AB26 ..... 3/2
7MB1 943-2AC00 ..... 4/7
7MB1 943-2AC01 ..... 4/7
7MB1 943-2AC06 ..... 4/9
7MB1 943-2AC10 ..... 4/7
7MB1 943-2AC11 ..... 4/7
7MB1 943-2AC12 ..... 4/3
7MB1 943-2AC13 ..... 4/3
7MB1 943-2AC32 ..... 4/13
7MB1 943-2AC34 ..... 4/13
7MB1 943-2AC35 ..... 4/13
7MB1 943-2AC36 ..... 4/13
7MB1 943-2AC37 ..... 4/13
7MB1 943-2AC38 ..... 4/13
7MB1 943-2AC40 ..... 4/9
7MB1 943-2AC41 ..... 4/9
7MB1 943-2AC42 ..... 4/9
7MB1 943-2AC43 ..... 4/9
7MB1 943-2AC44 ..... 4/11
7MB1 943-2AC45 ..... 4/11
7MB1 943-2AC46 ..... 4/11
7MB1 943-2AC47 ..... 4/11
7MB1 943-2AC48 ..... 4/11
7MB1 943-2AC51 ..... 4/9
7MB1 943-2AC52 ..... 4/6
7MB1 943-2AC53 ..... 4/5
7MB1 943-2AC54 ..... 4/5
7MB1 943-2AC55 ..... 4/5, 4/6
7MB1 943-2AC56 ..... 4/5, 4/6
7MB1 943-2AC57 ..... 4/5, 4/6
7MB1 943-2AC58 ..... 4/5, 4/6
7MB1 943-2AC60 ..... 4/5, 4/6
7MB1 943-2AC61 ..... 4/5, 4/6
7MB1 943-2AC62 ..... 4/5, 4/6
7MB1 943-2AC63 ..... 4/5, 4/6
7MB1 943-2AC64 ..... 4/5, 4/6
7MB1 943-2BA00 ..... 3/3
7MB1 943-2BA13 ..... 4/24
7MB1 943-2BA20 ..... 4/26
7MB1 943-2BA22 ..... 4/27
7MB1 943-2BA25 ..... 4/28
7MB1 943-2BA30 ..... 4/28
7MB1 943-2BA35 ..... 4/28
7MB1 943-2BA40 ..... 4/28
7MB1 943-2BA50 ..... 4/29
7MB1 943-2BA55 ..... 4/29
7MB1 943-2BA60 ..... 4/30
7MB1 943-2BA65 ..... 4/32
7MB1 943-2BA67 ..... 4/32
7MB1 943-2BA70 ..... 4/33, 4/45
7MB1 943-2BA75 ..... 4/33, 4/45
7MB1 943-2BA86 ..... 4/31
7MB1 943-2BA87 ..... 4/31
7MB1 943-2BA88 ..... 4/34
7MB1 943-2BB20 .... 4/29, 4/30, 4/32, 4/33, 4/35
7MB1 943-2BB22 .... 4/29, 4/30, 4/32, 4/33, 4/35
7MB1 943-2BB30 ..... 4/37
7MB1 943-2BB31 ..... 4/37
7MB1 943-2BB35 ..... 4/37
7MB1 943-2BB36 ..... 4/37
7MB1 943-2BB41 ..... 4/38
7MB1 943-2BB42 ..... 4/38
7MB1 943-2BB43 ..... 4/38
7MB1 943-2BB44 ..... 4/38
7MB1 943-2BB46 ..... 4/38
7MB1 943-2BB47 ..... 4/38
7MB1 943-2BB50 ..... 4/36
7MB1 943-2BB51 ..... 4/36
7MB1 943-2BB52 ..... 4/36
7MB1 943-2BB53 ..... 4/36
7MB1 943-2BB55 ..... 4/36
7MB1 943-2BB58 ..... 4/36
7MB1 943-2BB60 ..... 4/36
7MB1 943-2BB61 ..... 4/36
7MB1 943-2BB62 ..... 4/36
7MB1 943-2BB63 ..... 4/36
7MB1 943-2BB64 ..... 4/36
7MB1 943-2BB65 ..... 4/36
7MB1 943-2BC01 ..... 4/34
7MB1 943-2BC02 ..... 4/31, 4/34
7MB1 943-2BC03 ..... 4/31, 4/34
7MB1 943-2CA30 ..... 4/2
7MB1 943-2CA32 ..... 4/2
7MB1 943-2DA02 ..... 4/48
7MB1 943-2DA06 ..... 4/48
7MB1 943-2DA10 ..... 1/8, 4/26, 4/49
7MB1 943-2DA12 ..... 4/48
7MB1 943-2DA13 ..... 4/49
7MB1 943-2DA14 ..... 4/49
7MB1 943-2DA15 ..... 4/48
7MB1 943-2DA16 ..... 4/48
7MB1 943-2DA17 ..... 4/48
7MB1 943-2DA18 ..... 4/48
7MB1 943-2DA20 ..... 1/8, 4/49
7MB1 943-2DA21 ..... 4/49
7MB1 943-2DA22 ..... 4/49
7MB1 943-2DA24 ..... 4/49
7MB1 943-2DA26 ..... 4/49
7MB1 943-2DA27 ..... 4/49
7MB1 943-2DA28 ..... 4/49
7MB1 943-2DA30 ..... 4/49
7MB1 943-2DA32 ..... 4/49
7MB1 943-2DA33 ..... 4/49
7MB1 943-2DA40 ..... 4/45, 4/49
7MB1 943-2DA42 ..... 4/45, 4/49
7MB1 943-2DA43 ..... 4/49
7MB1 943-2DA45 ..... 4/49
7MB1 943-2DB10 ..... 4/49

7MB1 943-2DB40 ..... 4/47
7MB1 943-2DB41 ..... 4/47
7MB1 943-2DB42 ..... 4/47
7MB1 943-2DB43 ..... 4/47
7MB1 943-2DB44 ..... 4/47
7MB1 943-2EA00 ..... 4/28
7MB1 943-2EA02 ..... 4/26
7MB1 943-2EA04 ..... 4/28
7MB1 943-2EA06 ..... 4/28
7MB1 943-2EA08 ..... 4/27
7MB1 943-2EA10 ..... 4/28
7MB1 943-2EA20 ..... 4/27
7MB1 943-2EC00 ..... 4/25
7MB1 943-2EC02 ..... 4/25
7MB1 943-2EC04 ..... 4/25
7MB1 943-2EC06 ..... 4/25
7MB1 943-2FA00 ..... 1/3
7MB1 943-2FB01 ..... 1/4
7MB1 943-2FB02 ..... 1/4
7MB1 943-2FC01 ..... 1/5
7MB1 943-2FC02 ..... 1/5
7MB1 943-2FE02 ..... 1/8
7MB1 943-2FE03 ..... 1/8
7MB1 943-2FE04 ..... 1/8
7MB1 943-2FE06 ..... 1/8
7MB1 943-2FE07 ..... 1/8
7MB1 943-2FE08 ..... 1/8
7MB1 943-2FE12 ..... 1/8
7MB1 943-2FE14 ..... 1/8
7MB1 943-2FE20 ..... 1/8
7MB1 943-2FE21 ..... 1/8
7MB1 943-2FE22 ..... 1/8
7MB1 943-2FE23 ..... 1/8
7MB1 943-2FF01 ..... 1/6
7MB1 943-2FF03 ..... 1/6

7MB1 943-3..

7MB1 943-3AA00 ..... 2/2
7MB1 943-3AA02 ..... 2/2
7MB1 943-3AA04 ..... 2/2
7MB1 943-3AA20 ..... 4/16
7MB1 943-3AA22 ..... 4/16
7MB1 943-3AA26 ..... 4/22
7MB1 943-3AA27 ..... 4/22
7MB1 943-3AA28 ..... 4/22
7MB1 943-3AC40 ..... 4/22
7MB1 943-3AC41 ..... 4/22
7MB1 943-3BB45 ..... 4/22
7MB1 943-3BB46 ..... 4/22
7MB1 943-3BB47 ..... 4/22
7MB1 943-3BB48 ..... 4/22
7MB1 943-3BB50 ..... 4/22
7MB1 943-3BB53 ..... 4/22
7MB1 943-3BB54 ..... 4/22
7MB1 943-3BB55 ..... 4/23
7MB1 943-3BB56 ..... 4/23
7MB1 943-3BB57 ..... 4/23
7MB1 943-3BB58 ..... 4/23
7MB1 943-3BB60 ..... 4/22
7MB1 943-3CA10 ..... 2/3
7MB1 943-3CA15 ..... 2/3, 2/6
7MB1 943-3CA16 ..... 2/3, 2/4, 2/6, 2/8
7MB1 943-3CA17 ..... 2/3, 2/4, 2/6, 2/8
7MB1 943-3CA18 ..... 2/4, 2/8
7MB1 943-3CA20 ..... 2/3
7MB1 943-3CA21 ..... 2/4
7MB1 943-3CA22 ..... 2/4
7MB1 943-3CA23 ..... 2/6
7MB1 943-3CA24 ..... 2/6
7MB1 943-3CA25 ..... 2/8
7MB1 943-3CA26 ..... 2/8
7MB1 943-3CB01 ..... 2/10
7MB1 943-3CB11 ..... 2/10
7MB1 943-3CB17 ..... 2/10
7MB1 943-3CB18 ..... 2/10

7MB1 943-5..

7MB1 943-5AA00 ..... 4/43
7MB1 943-5AA01 ..... 4/43
7MB1 943-5AA02 ..... 4/43
7MB1 943-5AA03 ..... 4/43
7MB1 943-5AA04 ..... 4/43
7MB1 943-5AA05 ..... 4/43
7MB1 943-5AA06 ..... 4/43
7MB1 943-5AA07 ..... 4/43
7MB1 943-5AA08 ..... 4/43
7MB1 943-5AA10 ..... 4/43
7MB1 943-5AA11 ..... 4/43
7MB1 943-5AA12 ..... 4/43
7MB1 943-5AA13 ..... 4/43
7MB1 943-5AA14 ..... 4/43
7MB1 943-5AA15 ..... 4/43
7MB1 943-5AA16 ..... 4/43
7MB1 943-5AA17 ..... 4/43
7MB1 943-5AA18 ..... 4/43
7MB1 943-5AA20 ..... 4/43
7MB1 943-5AA21 ..... 4/43
7MB1 943-5AA22 ..... 4/43
7MB1 943-5AA23 ..... 4/43
7MB1 943-5AA24 ..... 4/43
7MB1 943-5AA25 ..... 4/43
7MB1 943-5AA26 ..... 4/43
7MB1 943-5AA27 ..... 4/43
7MB1 943-5AA28 ..... 4/43
7MB1 943-5AA30 ..... 4/43
7MB1 943-5AA31 ..... 4/43
7MB1 943-5AB00 ..... 4/44
7MB1 943-5AB02 ..... 4/44
7MB1 943-5AB04 ..... 4/44
7MB1 943-5AB05 ..... 4/44
7MB1 943-5AB06 ..... 4/44
7MB1 943-5AB07 ..... 4/44
7MB1 943-5AB08 ..... 4/44
7MB1 943-5AB10 ..... 4/44
7MB1 943-5AB11 ..... 4/44

7MB1 943-6..

7MB1 943-6EA00 ..... 5/6
7MB1 943-6EA01 ..... 5/6
7MB1 943-6EA02 ..... 5/6
7MB1 943-6EA03 ..... 5/6
7MB1 943-6EA04 ..... 5/6
7MB1 943-6EA05 ..... 5/6
7MB1 943-6EA06 ..... 5/6
7MB1 943-6EA07 ..... 5/6
7MB1 943-6EA08 ..... 5/6
7MB1 943-6EA11 ..... 5/6
7MB1 943-6EA12 ..... 5/6
7MB1 943-6EA13 ..... 5/6
7MB1 943-6EA16-0A 5/4
7MB1 943-6EA16-0B 5/4
7MB1 943-6EA16-0C 5/4
7MB1 943-6EA16-0D 5/4
7MB1 943-6EA16-0E 5/4
7MB1 943-6EA16-0F 5/4
7MB1 943-6EA16-0G 5/4
7MB1 943-6EA16-0H 5/4
7MB1 943-6EA16-0J 5/4
7MB1 943-6EA16-0K 5/4
7MB1 943-6EA16-0L 5/4
7MB1 943-6EA17 ..... 5/4
7MB1 943-6EA18-0A 5/4
7MB1 943-6EA18-0B 5/4
7MB1 943-6EA18-0C 5/4
7MB1 943-6EA18-0D 5/4
7MB1 943-6EA18-0E 5/4
7MB1 943-6EA18-0F 5/4
7MB1 943-6EA18-0G 5/4
7MB1 943-6EA18-0H 5/4
7MB1 943-6EA18-0J 5/4
7MB1 943-6EA18-0K 5/4
7MB1 943-6EA18-0L 5/4
7MB1 943-6EA30 ..... 5/7
7MB1 943-6EA35 ..... 5/7
7MB1 943-6EA40 ..... 5/7
7MB1 943-6EA45 ..... 5/7
7MB1 943-6EA50 ..... 5/7
7MB1 943-6EA55 ..... 5/7
7MB1 943-6EA60 ..... 5/7
7MB1 943-6EA65 ..... 5/7
7MB1 943-6EA66 ..... 5/7
7MB1 943-6EA67 ..... 5/8
7MB1 943-6EA68 ..... 5/8
7MB1 943-6EA74 ..... 5/8
7MB1 943-6EA75 ..... 5/8
7MB1 943-6EA76 ..... 5/8
7MB1 943-6EA77 ..... 5/8
7MB1 943-6EB00 ..... 5/6
7MB1 943-6EB01 ..... 5/6
7MB1 943-6EB02 ..... 5/6
7MB1 943-6EB03 ..... 5/6
7MB1 943-6EB04 ..... 5/6
7MB1 943-6EB05 ..... 5/6
7MB1 943-6EB06 ..... 5/6
7MB1 943-6EB07 ..... 5/6
7MB1 943-6EB08 ..... 5/6
7MB1 943-6EB10 ..... 5/6
7MB1 943-6EB11 ..... 5/6
7MB1 943-6EB12 ..... 5/6
7MB1 943-6EC01 ..... 5/6
7MB1 943-6EC02 ..... 5/6
7MB1 943-6EC03 ..... 5/6
7MB1 943-6EC04 ..... 5/6
7MB1 943-6EC05 ..... 5/6
7MB1 943-6EC06 ..... 5/6
7MB1 943-6EC07 ..... 5/6
7MB1 943-6EC08 ..... 5/6

C79127-...

C79127-Z400-A1 ..... 4/2

Notes

Conditions of sale and delivery

1. General Provisions

By using this catalog you can acquire hardware and software products described therein from Siemens AG subject to the following Terms and Conditions of Sale and Delivery (hereinafter referred to as "T&C"). Please note that the scope, the quality and the conditions for supplies and services, including software products, by any Siemens entity having a registered office outside Germany, shall be subject exclusively to the General Terms and Conditions of the respective Siemens entity. The following T&C apply exclusively for orders placed with Siemens Aktiengesellschaft, Germany.

1.1 For customers with a seat or registered office in Germany

For customers with a seat or registered office in Germany, the following applies subordinate to the T&C:

- the "General Terms of Payment"[1] and,
- for software products, the "General License Conditions for Software Products for Automation and Drives for Customers with a Seat or Registered Office in Germany"[1] and,
- for other supplies and services, the "General Conditions for the Supply of Products and Services of the Electrical and Electronics Industry"[1].

1.2 For customers with a seat or registered office outside Germany

For customers with a seat or registered office outside Germany, the following applies subordinate to the T&C:

- the "General Terms of Payment"[1] and,
- for software products, the "General License Conditions for Software Products for Automation and Drives for Customers with a Seat or Registered Office outside of Germany"[1] and
- for other supplies and/or services, the "General Conditions for Supplies of Siemens Industry for Customers with a Seat or Registered Office outside of Germany"[1].

2. Prices

The prices are in € (Euro) ex point of delivery, exclusive of packaging.

The sales tax (value added tax) is not included in the prices. It shall be charged separately at the respective rate according to the applicable statutory legal regulations.

Prices are subject to change without prior notice. We will charget the prices valid at the time of delivery.

To compensate for variations in the price of raw materials (e.g. silver, copper, aluminum, lead, gold, dysprosium and neodym), surcharges are calculated on a daily basis using the so-called metal factor for products containing these raw materials. A surcharge for the respective raw material is calculated as a supplement to the price of a product if the basic official price of the raw material in question is exceeded.

The metal factor of a product indicates the basic official price (for those raw materials concerned) as of which the surcharges on the price of the product are applied, and with what method of calculation.

An exact explanation of the metal factor can be downloaded at:

www.siemens.com/automation/salesmaterial-as/catalog/en/terms_of_trade_en.pdf

To calculate the surcharge (except in the cases of dysprosium and neodym), the official price from the day prior to that on which the order was received or the release order was effected is used.

To calculate the surcharge applicable to dysprosium and neodym ("rare earths"), the corresponding three-month basic average price in the quarter prior to that in which the order was received or the release order was effected is used with a one-month buffer (details on the calculation can be found in the explanation of the metal factor).

3. Additional Terms and Conditions

The dimensions are in mm. In Germany, according to the German law on units in measuring technology, data in inches apply only to devices for export.

Illustrations are not binding.

Insofar as there are no remarks on the individual pages of this catalog - especially with regard to data, dimensions and weights given - these are subject to change without prior notice.

4. Export regulations

We shall not be obligated to fulfill any agreement if such fulfillment is prevented by any impediments arising out of national or international foreign trade or customs requirements or any embargoes and/or other sanctions.

Export of goods listed in this catalog may be subject to licensing requirements. We will indicate in the delivery details whether licenses are required under German, European and US export lists. Goods labeled with "AL" not equal to "N" are subject to European or German export authorization when being exported out of the EU. Goods labeled with "ECCN" not equal to "N" are subject to US re-export authorization.

The export indications can be viewed in advance in the description of the respective goods on the Industry Mall, our online catalog system. Only the export labels "AL" and "ECCN" indicated on order confirmations, delivery notes and invoices are authoritative.

Even without a label, or with label "AL:N" or "ECCN:N", authorization may be required i .a. due to the final disposition and intended use of goods.

If you transfer goods (hardware and/or software and/or technology as well as corresponding documentation, regardless of the mode of provision) delivered by us or works and services (including all kinds of technical support) performed by us to a third party worldwide, you must comply with all applicable national and international (re-)export control regulations.

If required for the purpose of conducting export control checks, you (upon request by us) shall promptly provide us with all information pertaining to the particular end customer, final disposition and intended use of goods delivered by us respectively works and services provided by us, as well as to any export control restrictions existing in this relation.

The products listed in this catalog may be subject to European/German and/or US export regulations. Any export requiring approval is therefore subject to authorization by the relevant authorities.

Errors excepted and subject to change without prior notice.

1) The text of the Terms and Conditions of Siemens AG can be downloaded at www.siemens.com/automation/salesmaterial-as/catalog/en/terms_of_trade_en.pdf

Catalogs

Industry Automation, Drive Technologies and Low-Voltage Power Distribution

Further information can be obtained from our branch offices listed at www.siemens.com/automation/partner

Interactive Catalog on DVD	*Catalog*
for Industry Automation, Drive Technologies and Low Voltage Distribution	**CA 01**

Drive Systems	
Variable-Speed Drives	
SINAMICS G130 Drive Converter Chassis Units SINAMICS G150 Drive Converter Cabinet Units	D 11
SINAMICS GM150, SINAMICS SM150 Medium-Voltage Converters	D 12
ROBICON Perfect Harmony Medium-Voltage Air-Cooled Drives Germany Edition	D 15.1
SINAMICS S120 Chassis Format Units and Cabinet Modules SINAMICS S150 Converter Cabinet Units	D 21.3
SINAMICS DCM Converter Units	D 23.1
SINAMICS and Motors for Single-Axis Drives	D 31
Three-phase Induction Motors • H-compact • H-compact PLUS	D 84.1
Asynchronous Motors Standardline	D 86.1
Synchronous Motors with Permanent-Magnet Technology, HT-direct	D 86.2
DC Motors	DA 12
SIMOREG DC MASTER 6RA70 Digital Chassis Converters	DA 21.1
SIMOREG K 6RA22 Analog Chassis Converters	DA 21.2
PDF: SIMOREG DC MASTER 6RM70 Digital Converter Cabinet Units	*DA 22*
SIMOVERT PM Modular Converter Systems	DA 45
SIEMOSYN Motors	DA 48
MICROMASTER 420/430/440 Inverters	DA 51.2
MICROMASTER 411/COMBIMASTER 411	DA 51.3
SIMOVERT MASTERDRIVES Vector Control	DA 65.10
SIMOVERT MASTERDRIVES Motion Control	DA 65.11
Synchronous and asynchronous servomotors for SIMOVERT MASTERDRIVES	DA 65.3
SIMODRIVE 611 universal and POSMO	DA 65.4
SIMOTION, SINAMICS S120 and Motors for Production Machines	PM 21
SINUMERIK, SIMODRIVE and Motors for Machine Tools	NC 60
SINUMERIK, SINAMICS S120 and Motors for Machine Tools	NC 61
Low-Voltage Three-Phase-Motors	
SIMOTICS Low-Voltage Motors	D 81.1
MOTOX Geared Motors	D 87.1
SIMOGEAR Geared Motors	MD 50.1
Mechanical Driving Machines	
FLENDER Standard Couplings	MD 10.1
FLENDER SIG Standard industrial gear unit	MD 30.1
FLENDER SIP Standard industrial planetary gear units	MD 31.1

Low-Voltage Power Distribution and Electrical Installation Technology	
SENTRON Protection, Switching, Measuring and Monitoring Devices	LV 10.1
SIVACON · ALPHA Switchboards and Distribution Systems	LV 10.2
SIVACON 8PS Busbar Trunking Systems	LV 70
GAMMA Building Control	ET G1
PDF: DELTA Switches and Socket Outlets	*ET D1*

Motion Control	*Catalog*
SINAMICS and Motors for Single-Axis Drives	D 31
SINUMERIK & SIMODRIVE Automation Systems for Machine Tools	NC 60
SINUMERIK & SINAMICS Equipment for Machine Tools	NC 61
SINUMERIK 808D, SINAMICS V60 and G120 and SIMOTICS 1FL5 and 1LE1 motors	NC 81.1
SINUMERIK 828D BASIC T/BASIC M, SINAMICS S120 Combi and 1FK7/1PH8 motors	NC 82
SIMOTION, SINAMICS S120 and Motors for Production Machines	PM 21
Drive and Control Components for Cranes	CR 1

Power Supply and System Cabling	
Power supply SITOP	KT 10.1
System cabling SIMATIC TOP connect	KT 10.2

Process Instrumentation and Analytics	
Field Instruments for Process Automation	FI 01
SIREC Recorders and Accessories	MP 20
SIPART, Controllers and Software	MP 31
Products for Weighing Technology	WT 10
PDF: Process Analytical Instruments	*PA 01*
PDF: Process Analytics, Components for the System Integration	*PA 11*

Safety Integrated	
Safety Technology for Factory Automation	SI 10

SIMATIC HMI/PC-based Automation	
Human Machine Interface Systems/ PC-based Automation	ST 80/ ST PC

SIMATIC Ident	
Industrial Identification Systems	ID 10

SIMATIC Industrial Automation Systems	
Products for Totally Integrated Automation and Micro Automation	ST 70
SIMATIC PCS 7 Process Control System	ST PCS 7
Add-ons for the SIMATIC PCS 7 Process Control System	ST PCS 7.1
PDF: Migration solutions with the SIMATIC PCS 7 Process Control System	*ST PCS 7.2*

SIMATIC NET	
Industrial Communication	IK PI

SINVERT Photovoltaics	
Inverters and Components for Photovoltaic Installations	RE 10

SIRIUS Industrial Controls	
SIRIUS Industrial Controls	IC 10
SIRIUS Industrial Controls (selected content from catalog IC 10)	IC 90

System Solutions

Applications and Products for Industry are part of the interactive catalog CA 01

PDF: These catalogs are only available as pdf files.

Information and Download Center

PDF versions of the catalogs are available on the Internet at:
www.siemens.com/drives/infocenter

Get more information

All the latest information on process analytical instruments can be found on the internet at
www.siemens.com/processanalytics

Siemens AG
Industry Sector
Sensors and Communication
76181 KARLSRUHE
GERMANY

Subject to change without prior notice
Only PDF (E86060-K3511-A100-B1-7600)
MP.R4.SC.PA00.01.3.76
KG 1012 114 En
Produced in Germany

www.siemens.com/automation